CITY OF SEWARD
City Council
Regular Meeting
Agenda

Tuesday, March 17, 2026 | **7:00 PM** | **Municipal Building Council Chambers**

NOTICE IS HEREBY GIVEN that a meeting of the City Council of the City of Seward, Nebraska will be held at 7:00 PM on Tuesday, March 17, 2026, in the Council Chambers, 142 N 7th Street, Seward, Nebraska in which the meeting will be open to the public. The Mayor and City Council reserve the right to adjourn into Closed Session as per Section 84-1410 of the Nebraska Revised Statutes. An Agenda for such meeting, kept continually current, is available at the Office of the City Clerk, 537 Main Street, Seward, Nebraska, during normal business hours. Individuals requiring physical or sensory accommodations, who desire to attend or participate, please contact the City Clerk's Office at 402.643.2928 no later than 3:30 PM on the Friday preceding the Council Meeting. City financial claims and related invoices will be available for Council member review, audit, and voluntary signatures at the meeting location beginning 30 minutes prior to the scheduled meeting time.

CALL TO ORDER

PLEDGE OF ALLEGIANCE

DISCLOSURE OF OPEN MEETINGS ACT & OTHER NOTIFICATIONS

This is an Open Meeting of the Seward Nebraska Governing Body. The City of Seward abides by the Nebraska Open Meetings Act in conducting business. A copy of the Nebraska Open Meetings Act is displayed on the north wall of this meeting room facility as required. Disclosure of meeting recording processes is posted in the Meeting Room. Any citizen may address the Council regarding items included on the meeting agenda and are asked to complete and hand-in a Speaker Card to the Clerk. Presenters shall approach the podium, state their name & address for the Clerk's record and are asked to limit remarks to five minutes. All remarks shall be directed to the Mayor who shall determine by whom any appropriate response shall be made. The City of Seward reserves the right to adjust the order of items on this Agenda if necessary and may elect to take action on any of the items listed.

ROLL CALL

CONSENT AGENDA

1. City Codes Director Report

CURRENT YEAR: February 2026

Permits	Quantity	Permit Fee	Valuation
NEW CONST.	0	$ -	$ -
REMODEL/ADDIT.	6	$ 1,073.63	$ 255,109.00
ACCESSORY	2	$ 180.00	$ 17,000.00
RELOCATE	1	$ 50.00	$ -
ELECTRIC			
PLUMBING	3	$ 265.00	$ -
MECHANICAL	11	$ 1,025.00	$ -
SEWER TAP	0	$ -	$ -
TEMP. WATER	0	$ -	$ -
WATER TAP	0	$ -	$ -
TEMP. ELEC.	0	$ -	$ -
ELECTRIC SER.	0	$ -	$ -
TOTALS	23	$ 2,593.63	$ 272,109.00

LAST YEAR: February 2025

Permits	Quantity	Permit Fee	Valuation
NEW CONST.	1	$ 2,972.40	$ 700,000.00
REMODEL/ADDIT.	8	$ 1,123.95	$ 300,977.22
ACCESSORY	3	$ 722.40	$ 216,356.81
RELOCATE	1	$ 50.00	$ 20,780.05
ELECTRIC		$ -	$ -
PLUMBING	11	$ 1,220.00	$ -
MECHANICAL	6	$ 450.00	$ -
SEWER TAP	1	$ 50.00	$ -
TEMP. WATER	1	$ 120.00	$ -
WATER TAP	1	$ 838.00	$ -
TEMP. ELEC.	1	$ 50.00	$ -
ELECTRIC SER.	1	$ 200.00	$ -
TOTALS	35	$ 7,796.75	$ 1,238,114.08

YEAR TO DATE January to December 2026

Permits	Quantitiy	Permit Fee	Valuation
NEW CONST.	1	$ 2,634.70	$ 464,736.81
REMODEL/ADDIT.	8	$ 1,481.88	$ 346,409.00
ACCESSORY	13	$ 462.70	$ 35,554.25
RELOCATE	4	$ 150.00	$ 16,452.81
ELECTRIC		$ -	$ -
PLUMBING	10	$ 1,065.00	$ -
MECHANICAL	13	$ 1,275.00	$ -
SEWER TAP	1	$ 250.00	$ -
TEMP. WATER	1	$ 120.00	$ -
WATER TAP	1	$ 838.00	$ -
TEMP. ELEC.	1	$ 50.00	$ -
ELECTRIC SER.	1	$ 200.00	$ -
TOTALS	54	$ 8,527.28	$ 863,152.87

YEAR TO DATE January to December 2025

Permits	Quantity	Permit Fee	Valuation
NEW CONST.	5	$ 12,289.41	$ 2,096,452.18
REMODEL/ADDIT.	16	$ 1,809.35	$ 431,701.80
ACCESSORY	7	$ 832.00	$ 222,456.81
RELOCATE	4	$ 50.00	$ 20,780.05
ELECTRIC		$ -	$ -
PLUMBING	17	$ 1,545.00	$ -
MECHANICAL	11	$ 775.00	$ -
SEWER TAP	5	$ 1,050.00	$ -
TEMP. WATER	5	$ 600.00	$ -
WATER TAP	5	$ 4,190.00	$ -
TEMP. ELEC.	5	$ 250.00	$ -
ELECTRIC SER.	5	$ 1,000.00	$ -
TOTALS	85	$ 24,390.76	$ 2,771,390.84

OPEN Property Maintenance Code Violation Report

					3/9/2026
Property Address	**Violation Type**	**Deadline**	**Owner Information**	**Delivery Type**	**Status**
2026					
320 Lincoln St Apt 6	Egress Window	4/9/2026	SVP Properties 6830 Marcus Rd Lincoln NE 68516	Certified Mail	Tenant stated their bedroom window is no longer operable. 3-5-2026 Dworak and Officer Garcia met with the tenant to inspect the window. The window as not operable and was nailed shut. Letters are going out the week of 3-9-2026 to the SVP Properties (owner) and Arrow Capital (property management).
709 S Columbia Ave	Storm damaged accessory garage	4/6/2026	Arnold Wied	In Person	The Family decided to no longer have Gary Rolf help with the removal. A letter was sent on Friday 3-6-2026 informing the current owner it needs to be fixed or remvoed. Gary Rolf with help from the family has organized a group of individuals to remove the building and clean the site.No permit has been issued and no date has been set for the demolition.
430 N 2nd	Dead Tree	1/26/2026	Gerwick Trustee	Phone Call	Tree was removed by Witt 360. Property owner called and informed us Witt 360 will take the tree down the week of 1-26-2026.
2025					
938 Main St	Siding, no permit	12/10/2025	Dan Pearson	Phone Call	Dan received a permit and the siding was completed. Director Dworak left a a message with Dan to get a permit and update us on completion time frame.

2. City Treasurer Report

CLAIMS LIST
3/17/2026
COUNCIL MEETING

Abbreviations: AF-Annual Fee; BE-Benefits; BU-Building Upkeep; CI-Capital Improvements; DF-Diesel Fuel; DO-Donations; EQ-Equipment; ENG-Engineering; EX-Expense; FA-Fixed Asset; GS-Gas; GU-Ground Upkeep; IT-Technology; INS- Insurance; INV-Inventory;LG-Legal; MA-Maintenance; MAT-Materials; MC-Miscellaneous; MH-Merchandise; MI-Mileage; ML-Meals; MS-Memberships; OI-Oil; OP-Operations; PF-Postage; PU-Publications; RE-Repairs; RI-Reimbursement; RS-Restaurant; SA-Salaries; SE-Services; SL-Sales; ST-Sales Tax; SU-Supplies; TE-Testing; TR-Training; TO-Tools; UN-Uniforms; UT-Utilities

AKRS Equipment Inc	RE	30.00
All Copy Products Inc	SE	41.26
Allo Communications	UT	227.68
Amazon Capital Services Inc	MAT/SU	1,672.83
Aqua-Chem Inc	SU	551.90
Badger Meter	SE	385.28
Becky Baker	RI	53.65
Bizco Technologies	SE/IT	2,980.49
Black Hills Energy	UT	5,590.09
Border States Industries Inc	SU	47,542.33
Brandon Policky	RI	155.41
BSN Sports LLC	MC	648.00
Callaway Golf	MH	1,004.72
Capital Business Systems Inc	SE	35.10
Caselle Inc	IT	3,077.00
Cash-Wa Distributing Co	SU	531.02
Chargepoint Inc	SE	6,256.50
Charter Communications	UT	451.48
Cindy Voehl	RI	14.50
City Seward Library Petty Cash	PF	136.97
Commonwealth Electric Co	RE	891.00
Core & Main LP	OM	2,491.48
E M C Insurance Companies	INS	2,500.00
Eakes Office Solution	SU	407.00
Exchange Bank	EQ	4,464.00
Farmers Coop - Seward	DF/GS/RE	4,949.96
Farms Valley Football LLC	EX	150.00
Fast Mart	GS	27.30
Fastenal Company	SU	2,723.07
Galls LLC	UN	339.96
Great Plains Communications	UT	604.72
Great Plains Nursery	SE	345.00
H & S Plumbing Heating & Air	BU	1,475.00

Hach Company	TE/SU	7,360.65
Hireright LLC	SE	164.85
Hoffschneider Law PC LLO	SE	5,000.00
Husker Electric Supply Co	BU/SU/INV	18,045.54
Hydraulic Equipment Service	RE	139.13
Ingram Library Services	MAT	562.56
Jared Hochstein	RI	82.19
Johnny Ray Gomez	SE	150.00
Joseph Ruzicka/Seward Electronics	EQ	199.05
Josiah Jensen	RI	31.00
Judy Kraye	SE	118.29
K & Z Distributing	SU	291.00
Kerry Thomas	MC	1,200.00
Lee's Refrigeration	BU	164.72
Lincoln Journal-Star	PU	534.98
Lincoln Winwater Works Co	CI	1,128.17
M E Collins Contracting Co	CI	104,990.04
Matheson Tri-Gas Inc	SU	224.89
MC Retail LLC/Crouch's Farm & Hardware	SU/INV/BU	2,932.96
Memorial Health Care Systems	SE	72.00
Menards	BU	64.92
Michael R Koci	SE	400.00
Midwest Auto Parts	RE/SU	503.59
Midwest Automotive	RE	1,028.92
Midwest CDL Training LLC	TR	1,242.00
Midwest Laboratories Inc	TE	2,836.35
NE Dept of Revenue	ST	26,082.25
NE Dept of Ag	MC	56.12
Nebraska Equipment Inc	RE	17.00
Nebraska Pub Power-Des Moines	UT	495,672.56
Nebraska Sign	SU	687.17
Nelson Contracting LLC	BU	1,180.47
Norris Public Power District	UT	2,324.70
Odeys Inc	SU	399.00
Olsson	CI	242.53
One Billing Solutions LLC	SE	1,552.26
One Call Concepts Inc	SE	86.02
One Source Background Check Co	SE	147.45
O'Reilly Automotive Inc	RE/SU	357.65
Pac 'N' Save	SU/BU/EX/ML	5,266.85
Pepsi-Cola of Lincoln	SU	902.61
Prestige Flag	SU	643.90
Quality Brands of Lincoln	SU	616.10
Railroad Management/BNSF	AF	846.23

Richard Mailand/Mailand's Clothing	SE		132.00
Riverside Portables LLC	SE		112.00
Sapp Brothers Petroleum Inc	DF		843.34
Schemmer Architects Engineers	CI		38,698.00
Seward County Independent	PU		611.15
Seward County Treasurer	SE		47,604.00
Seward Lumber & Home Center	BU/SU		484.88
Seward Public Schools	MC		1,200.00
Seward Wind LLC	UT		43,335.93
Short Elliott Hendrickson Inc	CI		68,585.25
State Distributing Co	SU		370.11
Tim Hobson/Hobson Automotive	RE		69.71
Total Fire & Security Inc	BU		299.70
Tractor Supply	SU		157.65
Transunion Risk & Alternative	SE		100.00
Trimax Mowing Systems	RE		231.46
Truck Center Companies	RE		2,630.79
U S A Bluebook	RE		974.54
Uline	SU		128.05
Valentino's	EX		406.00
Verizon Financial Services LLC	UT		524.10
Visa - Pinnacle Bank			1,514.94
Harlequin	MAT	57.52	
NE State Fire Marshall	SE	156.00	
Wall Street Journal	MAT	69.86	
Temu	SU	64.30	
OTC Brands	SU	37.35	
NextLink	UT	118.12	
Paintingtogogh	SU	14.99	
TechSoup	IT	684.00	
Zoom	MC	15.99	
Lincoln Journal Star	MAT	88.00	
Sam's Club	SU	148.84	
Walmart	SU	59.97	
Wesco Distribution Inc	SU/INV/CI		16,521.78
Windstream Nebraska Inc	UT		758.66
Zimco Supply Co	EX/SU		1,794.77
		TOTAL	**$1,007,392.18**

3. Claims & Payables Reports

TREASURER'S REPORT	MONTH OF:	February-26				
VARIANCE AT: 41%						
	REVENUE	CURRENT YTD		UNRECEIPTED	PREVIOUS YTD	DIFFERENCE
DEPARTMENT	BUDGET	REVENUE	VARIANCE	BALANCE	REVENUE	B/W BUDGET YEARS
ELECTRIC	15,942,270	6,215,735	39%	9,726,534	5,206,805	1,008,930
ELEC BOND PYMT						
WATER	7,839,800	885,689	11%	6,954,111	982,206	(96,517)
WATER BOND PYMTS						
WATER SINKING FUND	20,000	- 0 -	0%	20,000	- 0 -	- 0 -
WASTEWATER TREATMENT	25,388,514	1,271,340	5%	24,117,174	1,204,710	66,630
WWTW BOND PYMT						
WWTW SINKING FUND	- 0 -	- 0 -	#DIV/0!	- 0 -	- 0 -	- 0 -
TOTAL BUSINESS-TYPE FUNDS	**49,190,583**	**8,372,764**	**17%**	**40,817,820**	**7,393,720**	**979,043**
GENERAL REVENUES	5,509,483	1,498,935	27%	4,010,548	1,745,163	(246,228)
POLICE	6,800	1,796	26%	5,004	1,375	421
E911	- 0 -	- 0 -	#DIV/0!	- 0 -	- 0 -	- 0 -
POLICE EQUITABLE SHARING	- 0 -	- 0 -	#DIV/0!	- 0 -	- 0 -	- 0 -
STREET	4,967,561	591,471	12%	4,376,090	723,288	(131,817)
STREET STP FUNDS	197,407	2	0%	197,405	2	(1)
DEBT SERVICE	595,900	405,961	68%	189,939	417,567	(11,606)
RAIL CAMPUS	- 0 -	- 0 -	#DIV/0!	- 0 -	- 0 -	- 0 -
CDBG DOWNTOWN REVITAL GRANT	30,000	2,732	9%	27,268	- 0 -	2,732
BLDGS & GRDS (CITY HALL)	48,000	20,000	42%	28,000	16,000	4,000
LEVEE ACCREDITATION	- 0 -	146,250	#DIV/0!	(146,250)	- 0 -	146,250
CIVIC CENTER	201,880	211,045	105%	(9,165)	920,923	(709,878)
LIBRARY	42,000	28,157	67%	13,843	12,330	15,827
PUBLIC PROPERTIES	32,100	10,337	32%	21,763	8,609	1,728
GUTHMAN TRUST/PERPETUAL CARE	11,775	8,554	73%	3,221	7,323	1,231
CEMETERY	68,000	33,378	49%	34,622	27,801	5,578
GOLF COURSE	430,025	32,505	8%	397,520	41,695	(9,190)
BLDGS & GRDS (OTHER)	- 0 -	98,848	#DIV/0!	(98,848)	- 0 -	98,848
BLDG INSP/PLAN & ZONING	108,100	46,366	43%	61,734	34,698	11,669
FIRE/EQUIP SINKING FUND	473,000	146,980	31%	326,020	244,344	(97,364)
TREE BOARD	- 0 -	- 0 -	#DIV/0!	- 0 -	- 0 -	- 0 -
ENGINEER	131,036	- 0 -	0%	- 0 -	- 0 -	- 0 -
DOWDING POOL /SWIM LESSONS	97,000	329	0%	96,671	140	190
CONCESSION STAND	900	900	100%	- 0 -	900	- 0 -
RECREATION/COMPLEX LIGHTS	43,796	38,075	87%	5,721	17,711	20,365
SENIOR CENTER	154,000	46,845	30%	107,155	40,728	6,117
SENIOR SHUTTLE	4,600	966	21%	3,634	1,902	(936)
RECYCLING	3,500	7,462	213%	(3,962)	528	6,934
WELLNESS CENTER	908,500	321,538	35%	586,962	30,959	290,579
ECONOMIC DEVELOPMENT (LB840)	328,269	222,829	68%	105,440	123,912	98,918
CAPITAL IMPROVEMENTS FUND	761,100	309,673	41%	451,427	4,171,212	(3,861,539)
TAX INCREMENT FINANCING	739,000	136,930	19%	602,070	251,624	(114,694)
TOTAL GOVERNMENTAL FUNDS	**15,893,732**	**4,368,866**	**27%**	**11,393,830**	**8,840,734**	**(4,471,868)**
	(UNAUDITED)					

TREASURER'S REPORT	MONTH OF:	February-26				
VARIANCE AT: 41%						
	EXPENDITURES	CURRENT YTD		UNEXPENDED	PREVIOUS YTD	DIFFERENCE
DEPARTMENT	BUDGET	EXPENDITURES	VARIANCE	BALANCE	EXPENDITURES	B/W BUDGET YEARS
ELECTRIC	18,450,222	5,097,653	28%	13,352,569	4,356,725	740,928
ELEC BOND PYMT	489,208	464,129	95%	25,079	463,635	494
WATER	4,193,086	1,375,525	33%	2,817,561	1,682,239	(306,715)
WATER BOND PYMTS	356,793	100,823	28%	255,970	99,021	1,801
WATER SINKING FUND	20,000	- 0 -	0%	20,000	- 0 -	- 0 -
WASTEWATER TREATMENT	24,267,265	825,364	3%	23,441,900	660,678	164,687
WWTW BOND PYMT	290,405	10,053	3%	280,353	- 0 -	10,053
WWTW SINKING FUND	- 0 -	- 0 -	#DIV/0!	- 0 -	- 0 -	- 0 -
TOTAL BUSINESS-TYPE FUNDS	**48,066,978**	**7,873,546**	**16%**	**40,193,431**	**7,262,298**	**611,248**
GENERAL EXPENSES	365,397	159,042	44%	206,355	132,536	26,507
POLICE	1,963,904	899,745	46%	1,064,159	858,881	40,864
E911	285,624	95,208	33%	190,416	102,625	(7,417)
POLICE EQUITABLE SHARING	- 0 -	- 0 -	#DIV/0!	- 0 -	- 0 -	- 0 -
STREET	5,908,491	2,598,634	44%	3,309,858	1,581,199	1,017,435
STREET STP FUNDS	184,598	- 0 -	0%	184,598	- 0 -	- 0 -
DEBT SERVICE	588,400	18,950	3%	569,450	22,190	(3,240)
RAIL CAMPUS	11,000	- 0 -	0%	11,000	17,945	(17,945)
CDBG-DOWNTOWN REVITAL GRANT	30,000	2,732	9%	27,268	- 0 -	2,732
BLDGS & GRDS (CITY HALL)	20,220	6,128	30%	14,092	10,953	(4,825)
LEVEE ACCREDITATION	15,000	26,448	176%	(11,448)	141,310	(114,862)
CIVIC CENTER	201,880	128,571	64%	73,309	1,312,212	(1,183,641)
LIBRARY	692,372	252,689	36%	439,683	236,787	15,901
PUBLIC PROPERTIES	679,996	317,688	47%	362,307	247,157	70,532
GUTHMAN TRUST - REGULAR	145	4,352	3001%	(4,207)	- 0 -	4,352
CEMETERY	251,343	106,118	42%	145,224	134,247	(28,129)
GOLF COURSE	756,747	211,958	28%	544,789	212,769	(811)
BLDGS & GRDS (OTHER)	13,400	100,745	752%	(87,345)	999	99,746
BLDG INSP/PLAN & ZONING	181,409	83,332	46%	98,077	81,924	1,408
FIRE/EQUIP SINKING FUND	943,305	374,291	40%	569,014	369,842	4,449
TREE BOARD	12,500	6,855	55%	5,645	- 0 -	6,855
ENGINEER	174,714	68,070	39%	106,644	75,661	(7,591)
DOWDING POOL/SWIM LESSONS	346,156	30,788	9%	315,368	36,523	(5,735)
RECREATION/COMPLEX LIGHTS	270,839	158,603	59%	112,236	153,069	5,535
SENIOR CENTER	293,461	92,409	31%	201,053	92,161	248
SENIOR SHUTTLE	4,837	2,808	58%	2,029	2,542	266
RECYCLING	36,926	25,543	69%	11,383	12,893	12,650
WELLNESS CENTER	847,795	381,060	45%	466,735	76,162	304,898
ECONOMIC DEVELOPMENT LB840	328,269	- 0 -	0%	328,269	184,647	(184,647)
CAPITAL IMPROVEMENTS FUND	1,150,000	188,110	16%	961,890	3,745,932	(3,557,823)
TAX INCREMENT FINANCING	705,000	117,564	17%	587,436	107,126	10,438
TOTAL GOVERNMENTAL FUNDS	**17,263,729**	**6,458,441**	**37%**	**10,805,288**	**9,950,290**	**(3,491,849)**
	(UNAUDITED)					

Pledges By Pledgee And Maturity

BBA

Pledged To: CITY TREASURER

Jones Bank - Seward, NE

As Of 2/28/2026

Receipt# / Safekeeping Location	CUSIP	ASC 320	Description / Maturity	Prerefund	Pool/Type / Coupon	Moody / S&P	Original Face / Pledged Percent	Pledged: Original Face	Pledged: Par	Pledged: Book Value	Pledged: Market Value
COMM: COMMERCE BANK	148006EZ8	AFS	CASS CO SD #1 NE 26 / 12/15/26		2.35		200,000.00 / 100.00%	200,000.00	200,000.00	200,000.00	196,872.00
COMM: COMMERCE BANK	25932KCL7	AFS	DOUGLAS SID #404-REF NE 27 / 08/15/27		1.75		225,000.00 / 100.00%	225,000.00	225,000.00	225,000.00	222,286.50
COMM: COMMERCE BANK	869325CL2	AFS	SUTHERLAND -REF NE 28 / 06/15/28		0.95		140,000.00 / 100.00%	140,000.00	140,000.00	140,000.00	131,034.40
COMM: COMMERCE BANK	25932KCM5	AFS	DOUGLAS SID #404-REF NE 28 / 08/15/28		1.85		230,000.00 / 100.00%	230,000.00	230,000.00	230,000.00	224,958.40
COMM: COMMERCE BANK	25933AFG6	AFS	DOUGLAS SID #492-REF NE 28 / 08/15/28		3.20		175,000.00 / 100.00%	175,000.00	175,000.00	175,000.00	173,209.75
COMM: COMMERCE BANK	123540GD2	AFS	BUTLER CO SD - 0056 NE 28 / 12/15/28		1.35		150,000.00 / 100.00%	150,000.00	150,000.00	150,000.00	139,350.00
COMM: COMMERCE BANK	80373YCT1	AFS	SARPY CO SID #158-REF NE 29 / 11/15/29		3.10		155,000.00 / 100.00%	155,000.00	155,000.00	155,000.00	151,569.85
COMM: COMMERCE BANK	920340BQ8	AFS	VALPARAISO RURAL FIRE NE 30 / 07/15/30		2.10		75,000.00 / 100.00%	75,000.00	75,000.00	75,000.00	68,895.00
COMM: COMMERCE BANK	486890X92	AFS	KEARNEY NE 30 / 10/15/30		2.60	A+	150,000.00 / 100.00%	150,000.00	150,000.00	150,000.00	143,418.00
COMM: COMMERCE BANK	0792124W3	AFS	BELLEVUE-REF NE 30 / 12/15/30		3.10		250,000.00 / 100.00%	250,000.00	250,000.00	250,000.00	240,930.00
COMM: COMMERCE BANK	751265RA9	AFS	RALSTON-VEHICLE NE 32 / 06/01/32		3.70		300,000.00 / 100.00%	300,000.00	300,000.00	300,000.00	300,297.00
COMM: COMMERCE BANK	25932WDR7	AFS	DOUGLAS CO #517 NE 32 / 08/15/32		2.70		235,000.00 / 100.00%	235,000.00	235,000.00	235,000.00	225,247.50
COMM: COMMERCE BANK	661615UB8	AFS	N PLATTE-REF NE 32 / 12/15/32		3.00	A+	200,000.00 / 100.00%	200,000.00	200,000.00	200,000.00	200,022.00

Although the information in this report has been obtained from sources believed to be reliable, its accuracy cannot be guaranteed.

Pledges By Pledgee And Maturity

BBA

Pledged To: CITY TREASURER

As Of 2/28/2026

Jones Bank - Seward, NE

Receipt# / Safekeeping Location	CUSIP	ASC 320	Description / Maturity	Prerefund	Pool/Type / Coupon	Moody / S&P	Original Face / Pledged Percent	Pledged: Original Face	Pledged: Par	Pledged: Book Value	Pledged: Market Value
COMM: COMMERCE BANK	80378TEW8	AFS	SARPY SID #257-REF NE 33 / 10/15/33		3.85		250,000.00 / 100.00%	250,000.00	250,000.00	250,000.00	246,550.00
COMM: COMMERCE BANK	698864HR9	AFS	PAPILLION MUNI FACS NE 33 / 12/15/33		3.00	Aa1	175,000.00 / 100.00%	175,000.00	175,000.00	175,000.00	171,356.50
COMM: COMMERCE BANK	818468BN9	AFS	SEWARD-REF NE 33 / 12/15/33		2.35	AA	400,000.00 / 100.00%	400,000.00	400,000.00	400,000.00	385,316.00
COMM: COMMERCE BANK	943776KA1	AFS	WAVERLY NE 34 / 06/01/34		2.95		335,000.00 / 100.00%	335,000.00	335,000.00	335,000.00	303,262.10
COMM: COMMERCE BANK	840372SX5	AFS	SOUTH SIOUX CITY-REF NE 36 / 08/01/36		2.20		200,000.00 / 100.00%	200,000.00	200,000.00	200,000.00	189,774.00
COMM: COMMERCE BANK	25929PDW6	AFS	DOUGLAS SID #491-REF NE 36 / 09/15/36		2.60		200,000.00 / 100.00%	200,000.00	200,000.00	200,000.00	171,418.00
COMM: COMMERCE BANK	80378EDN2	AFS	SARPY SID #263-REF NE 36 / 09/15/36		3.80		260,000.00 / 100.00%	260,000.00	260,000.00	260,000.00	257,511.80
COMM: COMMERCE BANK	98676TCF8	AFS	YORK NE-B-REF NE 36 / 10/01/36		1.85		200,000.00 / 100.00%	200,000.00	200,000.00	199,049.17	153,766.00
COMM: COMMERCE BANK	23087RHC5	AFS	CUMING CO-B-REF NE 36 / 12/15/36		2.00		250,000.00 / 100.00%	250,000.00	250,000.00	250,000.00	215,357.50
COMM: COMMERCE BANK	68905WFK3	AFS	OTOE CO NE SD #501-B NE 36 / 12/15/36		1.70	Aa2	200,000.00 / 100.00%	200,000.00	200,000.00	200,000.00	161,992.00
COMM: COMMERCE BANK	803787DT4	AFS	SARPY CO SD#46 NE 36 / 12/15/36		2.00	AA-	200,000.00 / 100.00%	200,000.00	200,000.00	200,187.77	168,204.00
COMM: COMMERCE BANK	25938WBX0	AFS	DOUGLAS CO SID #562 NE 37 / 06/01/37		3.85		320,000.00 / 100.00%	320,000.00	320,000.00	320,000.00	299,526.40
COMM: COMMERCE BANK	80377XCV4	AFS	SARPY CO SID #190-REF NE 37 / 10/15/37		4.00		205,000.00 / 100.00%	205,000.00	205,000.00	205,000.00	202,382.15

Although the information in this report has been obtained from sources believed to be reliable, its accuracy cannot be guaranteed.

Pledges By Pledgee And Maturity

BBA

Pledged To: CITY TREASURER

Jones Bank - Seward, NE

As Of 2/28/2026

Receipt# / Safekeeping Location	CUSIP	ASC 320	Description / Maturity	Prerefund	Pool/Type / Coupon	Moody / S&P	Original Face / Pledged Percent	Pledged Original Face	Pledged Par	Pledged Book Value	Pledged Market Value
COMM: COMMERCE BANK	25929RCY9	AFS	DOUGLAS CO SID #485 NE 38 / 05/15/38		2.65		200,000.00 / 100.00%	200,000.00	200,000.00	200,000.00	158,506.00
COMM: COMMERCE BANK	25933VBY5	AFS	DOUGLAS CO SANTN 559 NE 38 / 06/15/38		4.10		165,000.00 / 100.00%	165,000.00	165,000.00	165,000.00	161,863.35
COMM: COMMERCE BANK	25932EDK2	AFS	DOUGLAS CO SID #438 NE 38 / 08/15/38		4.20		250,000.00 / 100.00%	250,000.00	250,000.00	250,000.00	250,340.00
COMM: COMMERCE BANK	80373RDR9	AFS	SARPY CO DT #220-REF NE 38 / 08/15/38		4.05		170,000.00 / 100.00%	170,000.00	170,000.00	170,000.00	170,027.20
COMM: COMMERCE BANK	80387LAP3	AFS	SARPY CO SAN & IMP DT NE 38 / 08/15/38		2.75		290,000.00 / 100.00%	290,000.00	290,000.00	290,000.00	230,521.00
COMM: COMMERCE BANK	72778PCU5	AFS	PLATTE CO SD #5 NE 38 / 12/15/38		2.00	AA-	200,000.00 / 100.00%	200,000.00	200,000.00	200,000.00	157,782.00
COMM: COMMERCE BANK	80379KDH0	AFS	SARPY CO SID #272-REF NE 38 / 12/15/38		4.40		215,000.00 / 100.00%	215,000.00	215,000.00	215,000.00	215,004.30
COMM: COMMERCE BANK	25934MCK3	AFS	DOUGLAS SID #531-REF NE 39 / 01/15/39		4.35		200,000.00 / 100.00%	200,000.00	200,000.00	200,000.00	199,636.00
COMM: COMMERCE BANK	25936ECH6	AFS	DOUGLAS CO SID #561 NE 39 / 01/15/39		4.35		180,000.00 / 100.00%	180,000.00	180,000.00	180,000.00	179,672.40
COMM: COMMERCE BANK	25930BEE3	AFS	DOUGLAS CO SID #504 NE 39 / 08/15/39		3.40		215,000.00 / 100.00%	215,000.00	215,000.00	215,000.00	199,986.55
COMM: COMMERCE BANK	25931EGP9	AFS	DOUGLAS CO SAN #503 NE 39 / 08/15/39		2.65		225,000.00 / 100.00%	225,000.00	225,000.00	225,000.00	174,233.25
COMM: COMMERCE BANK	80373XBC1	AFS	SARPY CO SAN & IMPT NE 39 / 08/15/39		2.60		200,000.00 / 100.00%	200,000.00	200,000.00	200,000.00	153,268.00
COMM: COMMERCE BANK	80373YDV5	AFS	SARPY CO SID#158-REF NE 39 / 08/15/39		2.95		190,000.00 / 100.00%	190,000.00	190,000.00	190,000.00	187,704.80

Although the information in this report has been obtained from sources believed to be reliable, its accuracy cannot be guaranteed.

Pledges By Pledgee And Maturity

BBA

Pledged To: CITY TREASURER

As Of 2/28/2026

Jones Bank - Seward, NE

Receipt# / Safekeeping Location	CUSIP	ASC 320	Description / Maturity	Prerefund	Pool/Type / Coupon	Moody / S&P	Original Face / Pledged Percent	Pledged: Original Face	Pledged: Par	Pledged: Book Value	Pledged: Market Value
COMM: COMMERCE BANK	25931BEJ1	AFS	DOUGLAS SID #507-REF NE 40 05/01/40		3.15		185,000.00 100.00%	185,000.00	185,000.00	185,000.00	148,875.05
COMM: COMMERCE BANK	25933VDM9	AFS	DOUGLAS CO SD #559 NE 40 05/15/40		3.40		175,000.00 100.00%	175,000.00	175,000.00	175,000.00	175,031.50
COMM: COMMERCE BANK	25930LDG7	AFS	DOUGLAS CO NE SID#530 NE 40 09/15/40		3.00		150,000.00 100.00%	150,000.00	150,000.00	150,000.00	129,723.00
COMM: COMMERCE BANK	25933EEG9	AFS	DOUGLAS CO SAN & IMPT NE 4(11/15/40		3.15		190,000.00 100.00%	190,000.00	190,000.00	190,000.00	183,262.60
COMM: COMMERCE BANK	80388MBJ3	AFS	SARPY CNTY SANITATION NE 4(12/15/40		4.00		240,000.00 100.00%	240,000.00	240,000.00	240,000.00	210,050.40
COMM: COMMERCE BANK	617775EV9	AFS	MORRILL CO NE 41 06/15/41		2.25		240,000.00 100.00%	240,000.00	240,000.00	240,000.00	169,468.80
COMM: COMMERCE BANK	25936EDY8	AFS	DOUGLAS CO SID #561 NE 41 07/15/41		2.90		235,000.00 100.00%	235,000.00	235,000.00	235,000.00	203,023.55
COMM: COMMERCE BANK	25939LDA1	AFS	DOUGLAS CO SID #567 NE 41 07/15/41		2.75		200,000.00 100.00%	200,000.00	200,000.00	200,000.00	138,662.00
COMM: COMMERCE BANK	25930LDN2	AFS	DOUGLAS CO SAN #530 NE 41 08/15/41		2.85		200,000.00 100.00%	200,000.00	200,000.00	200,000.00	148,862.00
COMM: COMMERCE BANK	80379QBT3	AFS	SARPY CO NE SAN-REF NE 41 08/15/41		2.75		255,000.00 100.00%	255,000.00	255,000.00	255,000.00	187,124.10
COMM: COMMERCE BANK	80387LAS7	AFS	SARPY CO SAN & IMP DT NE 41 08/15/41		2.90		200,000.00 100.00%	200,000.00	200,000.00	200,000.00	149,912.00
COMM: COMMERCE BANK	25938MDE2	AFS	DOUGLAS CO SAN & IMPT NE 41 09/01/41		2.80		200,000.00 100.00%	200,000.00	200,000.00	200,000.00	148,222.00
COMM: COMMERCE BANK	25933EFW3	AFS	DOUGLAS CO NE SAN-B NE 41 09/15/41		2.85		235,000.00 100.00%	235,000.00	235,000.00	235,000.00	174,602.65

Although the information in this report has been obtained from sources believed to be reliable, its accuracy cannot be guaranteed.

Pledges By Pledgee And Maturity

BBA

Pledged To: CITY TREASURER

Jones Bank - Seward, NE

As Of 2/28/2026

Receipt# / Safekeeping Location	CUSIP	ASC 320	Description / Maturity	Prerefund	Pool/Type / Coupon	Moody / S&P	Original Face / Pledged Percent	Pledged Original Face	Pledged Par	Pledged Book Value	Pledged Market Value
COMM: COMMERCE BANK	25939HCU7	AFS	DOUGLAS CO SID#563 NE 41 / 11/15/41		2.85		200,000.00 / 100.00%	200,000.00	200,000.00	200,000.00	145,392.00
COMM: COMMERCE BANK	119483EL5	AFS	BUFFALO CO SD #0009 NE 41 / 12/15/41		2.00	A1	200,000.00 / 100.00%	200,000.00	200,000.00	194,837.47	153,090.00
COMM: COMMERCE BANK	259327W42	AFS	DOUGLAS CO SD #17 NE 41 / 12/15/41		4.00	AA	250,000.00 / 100.00%	250,000.00	250,000.00	253,127.33	250,222.50
COMM: COMMERCE BANK	25932XDN4	AFS	DOUGLAS CO NE SID-REF NE 41 / 12/15/41		2.75		250,000.00 / 100.00%	250,000.00	250,000.00	250,000.00	215,260.00
COMM: COMMERCE BANK	25940KAS4	AFS	SID DOUGLAS #596-REF NE 41 / 12/15/41		2.75		275,000.00 / 100.00%	275,000.00	275,000.00	275,000.00	201,657.50
COMM: COMMERCE BANK	808290FV7	AFS	SCHUYLER NE 42 / 03/15/42		2.75		250,000.00 / 100.00%	250,000.00	250,000.00	250,000.00	185,717.50
COMM: COMMERCE BANK	80376KBN2	AFS	SARPY CO SID #334 NE 42 / 05/15/42		3.70		215,000.00 / 100.00%	215,000.00	215,000.00	215,000.00	190,137.40
COMM: COMMERCE BANK	25932XEH6	AFS	DOUGLAS CO SID #524 NE 42 / 09/15/42		4.65		250,000.00 / 100.00%	250,000.00	250,000.00	250,000.00	243,792.50
COMM: COMMERCE BANK	25929MEM4	AFS	DOUGLAS CO SID #405-R NE 42 / 11/15/42		3.55		250,000.00 / 100.00%	250,000.00	250,000.00	250,000.00	202,257.50
COMM: COMMERCE BANK	006058DK4	AFS	ADAMS CO NE 42 / 12/15/42		4.00	AA-	300,000.00 / 100.00%	300,000.00	300,000.00	303,589.00	300,339.00
COMM: COMMERCE BANK	80387HCA3	AFS	SARPY CO SID #304 NE 43 / 05/15/43		5.00		200,000.00 / 100.00%	200,000.00	200,000.00	200,000.00	190,794.00
COMM: COMMERCE BANK	3132DMPY5	AFS	FRLMC 30YR / 03/01/50		SD0439 / 3.50		1,000,000.00 / 100.00%	1,000,000.00	492,621.94	535,930.06	462,266.58
64 Securities Pledged To:			**1010 - CITY TREASURER**					**14,725,000.00**	**14,217,621.94**	**14,261,720.80**	**12,690,797.83**

CASH IN BANK $3,284,288.60

Although the information in this report has been obtained from sources believed to be reliable, its accuracy cannot be guaranteed.

Report Sequence: sgrp, CUSIP, Ticket

SGrp / STyp / Loc/PI	CUSIP / Description / S&P	Moody	Rate / State	Ticket-P#	Call Type / Next Call Dt / Call Price	Maturity Dt / Issue Dt / Intent	Total Face / Total Par	Pledge Values: Pledged Face / % of Total	Par Value / Book Value	Carrying Value / Interest Rec	Market Value / Collateral Value
PLEDGEE: CITY OF SEWARD (02)											
CMO	3137AWU78		1.250	185157011-1		12/15/2027					
FHR	FHR 4145 AC					12/1/2012	1,500,000.00	1,500,000.00	553.37	549.64	549.64
D02/02						AFS	553.37	100.00%	553.29	0.58	550.22
GNMA	36176W2B6		4.000	185168920-1		12/15/2026					
GNMA	GNMA POOL 778670					12/1/2011	560,000.00	560,000.00	2,431.46	2,431.76	2,431.76
D02/02						AFS	2,431.46	100.00%	2,443.20	8.10	2,439.86
MBS	3128CUV29		2.500	177020851-1		2/1/2033					
FGLM	FHLMC POOL G30633					2/1/2013	1,000,000.00	1,000,000.00	115,053.87	113,269.58	113,269.58
D02/02						AFS	115,053.87	100.00%	118,896.66	239.70	113,509.28
MBS	3128MDW74		3.500	177039340-1		12/1/2028					
FGLM	FHLMC POOL G14970					12/1/2013	1,450,000.00	1,450,000.00	62,096.19	61,580.32	61,580.32
D02/02						AFS	62,096.19	100.00%	63,440.10	181.11	61,761.43
MBS	3128Q0GL5		4.000	185147609-1		5/1/2027					
FGLM	FHLMC POOL J19203					5/1/2012	425,000.00	425,000.00	3,116.89	3,112.10	3,112.10
D02/02						AFS	3,116.89	100.00%	3,142.69	10.39	3,122.49
MBS	31329KRS5		3.000	177051131-1		4/1/2033					
FGLM	FHLMC POOL ZA2297					9/1/2018	1,000,000.00	1,000,000.00	116,314.91	113,839.99	113,839.99
D02/02						AFS	116,314.91	100.00%	112,352.00	290.79	114,130.78
MBS	3132A8S34		2.500	177051143-1		1/1/2031					
FGLM	FHLMC POOL ZS7738					9/1/2018	860,000.00	860,000.00	95,886.13	93,470.66	93,470.66
D02/02						AFS	95,886.13	100.00%	93,018.70	199.76	93,670.42
MBS	3138AMK38		4.500	185159473-1		7/1/2026					
FNMA	FNMA POOL AI7513					7/1/2011	500,000.00	500,000.00	1,476.42	1,474.92	1,474.92
D02/02						AFS	1,476.42	100.00%	1,479.64	5.54	1,480.46
MBS	3138EJLQ9		4.000	185159924-1		7/1/2027					
FNMA	FNMA POOL AL2134					7/1/2012	443,000.00	443,000.00	3,526.57	3,502.44	3,502.44
D02/02						AFS	3,526.57	100.00%	3,555.03	11.76	3,514.20
MBS	3138EKRM9		3.500	185160071-1		2/1/2028					
FNMA	FNMA POOL AL3191					2/1/2013	500,000.00	500,000.00	5,310.15	5,233.95	5,233.95
D02/02						AFS	5,310.15	100.00%	5,364.43	15.49	5,249.44

Report reflects information submitted to Stifel Bond Accounting by the customer. It is not intended to be used as the official record of safekeeping location and/or pledged holdings. See customer's Safekeeping Agent reports as needed.

SGrp / STyp / Loc/Pl	CUSIP / Description / S&P	Moody	Rate / State	Ticket-P#	Call Type / Next Call Dt / Call Price	Maturity Dt / Issue Dt / Intent	Total Face / Total Par	Pledge Values: Pledged Face / % of Total	Par Value / Book Value	Carrying Value / Interest Rec	Market Value / Collateral Value
MBS	3138EKXJ9		5.500	177039338-1		1/1/2034					
FNMA	FNMA POOL AL3380					3/1/2013	2,000,000.00	2,000,000.00	123,445.44	126,965.74	126,965.74
D02/02						AFS	123,445.44	100.00%	133,116.46	565.79	127,531.53
MBS	3138ELYF4		4.000	185160221-1		10/1/2028					
FNMA	FNMA POOL AL4309					10/1/2013	1,000,000.00	1,000,000.00	11,653.81	11,646.70	11,646.70
D02/02						AFS	11,653.81	100.00%	11,814.87	38.85	11,685.55
MBS	3138EMCY5		4.000	185160242-1		2/1/2027					
FNMA	FNMA POOL AL4586					12/1/2013	575,000.00	575,000.00	577.02	575.60	575.60
D02/02						AFS	577.02	100.00%	580.65	1.92	577.52
MBS	3138EMPD7		3.500	184006560-1		3/1/2029					
FNMA	FNMA POOL AL4919					2/1/2014	2,000,000.00	631,641.94	26,264.35	26,199.23	26,199.23
D02/02						AFS	83,162.16	31.58%	26,858.47	76.61	26,275.83
MBS	3138EQ5H1		3.500	176002956-1		11/1/2030					
FNMA	FNMA POOL AL8047					1/1/2016	1,050,000.00	1,050,000.00	98,603.47	95,954.74	95,954.74
D02/02						AFS	98,603.47	100.00%	102,006.44	287.59	96,242.33
MBS	3138WDU82		3.000	178000698-1		1/1/2030					
FNMA	FNMA POOL AS4206					12/1/2014	1,160,000.00	1,160,000.00	60,963.75	60,021.87	60,021.87
D02/02						AFS	60,963.75	100.00%	62,372.31	152.41	60,174.28
MBS	3140FBGJ3		2.000	177051139-1		7/1/2031					
FNMA	FNMA POOL BD3800					7/1/2016	1,375,000.00	1,375,000.00	178,865.98	171,644.13	171,644.13
D02/02						AFS	178,865.98	100.00%	172,620.94	298.11	171,942.24
MBS	3140J5EA3		2.500	177039342-1		12/1/2029					
FNMA	FNMA POOL BM1028					3/1/2017	1,750,000.00	1,750,000.00	109,169.45	106,739.64	106,739.64
D02/02						AFS	109,169.45	100.00%	110,583.81	227.44	106,967.08
MBS	3140J5EA3		2.500	185164038-1		12/1/2029					
FNMA	FNMA POOL BM1028					3/1/2017	300,000.00	300,000.00	18,714.76	18,298.22	18,298.22
D02/02						AFS	18,714.76	100.00%	18,747.61	38.99	18,337.21
MBS	31418AAC2		3.000	185165786-1		11/1/2026					
FNMA	FNMA POOL MA0902					10/1/2011	1,000,000.00	1,000,000.00	2,946.50	2,927.01	2,927.01
D02/02						AFS	2,946.50	100.00%	2,950.71	7.37	2,934.38
MBS	31418AKN7		3.000	177011537-1		10/1/2032					
FNMA	FNMA POOL MA1200					9/1/2012	800,000.00	800,000.00	65,935.50	64,542.52	64,542.52
D02/02						AFS	65,935.50	100.00%	68,178.15	164.84	64,707.36

Report reflects information submitted to Stifel Bond Accounting by the customer. It is not intended to be used as the official record of safekeeping location and/or pledged holdings. See customer's Safekeeping Agent reports as needed.

Report Sequence: sgrp, CUSIP, Ticket

SGrp / STyp / Loc/PI	CUSIP / Description / S&P	Moody	Rate	State	Ticket-P#	Call Type / Next Call Dt / Call Price	Maturity Dt / Issue Dt / Intent	Total Face / Total Par	Pledge Values: Pledged Face / % of Total	Par Value / Book Value	Carrying Value / Interest Rec	Market Value / Collateral Value
MBS	31418AVK1		3.000		177039341-1		7/1/2028					
FNMA	FNMA POOL MA1517						6/1/2013	1,000,000.00	1,000,000.00	38,944.62	38,605.66	38,605.66
D02/02							AFS	38,944.62	100.00%	39,358.28	97.36	38,703.02
MBS	31418B5R3		4.000		177020853-1		6/1/2036					
FNMA	FNMA POOL MA2655						5/1/2016	410,000.00	410,000.00	65,701.06	64,188.89	64,188.89
D02/02							AFS	65,701.06	100.00%	69,193.49	219.00	64,407.89
MBS	31418DRM6		2.000		177046216-1		8/1/2030					
FNMA	FNMA POOL MA4091						7/1/2020	610,000.00	610,000.00	126,399.29	122,319.71	122,319.71
D02/02							AFS	126,399.29	100.00%	123,954.29	210.67	122,530.38
MBS	31418EA83		1.500		177048016-1		2/1/2032					
FNMA	FNMA POOL MA4530						1/1/2022	179,142.00	167,163.35	79,825.45	75,553.91	75,553.91
D02/02							AFS	85,545.61	93.31%	76,881.23	99.78	75,653.69
MUNI	25887CAZ1		2.250	NE	177039343-1	Cont	1/1/2034					
GO	DOUGLAS CNTY NEB S&I #540					1/1/2027	1/5/2022	120,000.00	120,000.00	120,000.00	103,234.89	103,234.89
D02/02						100.000	AFS	120,000.00	100.00%	120,000.00	450.00	103,684.89
MUNI	259290EB6		3.100	NE	185142828-1	Contin	8/15/2030					
GO	DOUGLAS CNTY NE SAN & IMPT DIS					3/1/2026	6/15/2016	150,000.00	150,000.00	150,000.00	145,266.16	145,266.16
D02/02						100.000	AFS	150,000.00	100.00%	150,000.00	206.67	145,472.83
MUNI	259305DT4		2.500	NE	178003667-1	Cont	3/1/2036					
GO	DOUGLAS CNTY NEB S&I #499					3/1/2027	3/1/2022	150,000.00	150,000.00	150,000.00	126,302.49	126,302.49
D02/02						100.000	AFS	150,000.00	100.00%	150,000.00	1,875.00	128,177.49
MUNI	25930TBJ6		2.900	NE	184003054-1	Cont	11/15/2036					
GO	DOUGLAS CNTY NEB SANI & #421					3/1/2026	5/19/2020	50,000.00	50,000.00	50,000.00	50,016.74	50,016.74
D02/02						100.000	AFS	50,000.00	100.00%	50,000.00	426.94	50,443.68
MUNI	25931BEG7		2.750	NE	184010678-1	Cont	5/1/2035					
GO	DOUGLAS CNTY NEB SAN & IMPT DI					5/1/2026	5/3/2021	175,000.00	175,000.00	175,000.00	151,240.94	151,240.94
D02/02						100.000	AFS	175,000.00	100.00%	175,000.00	1,604.17	152,845.11
MUNI	25931LCN2		2.700	NE	185142862-1	Contin	11/15/2028					
GO	DOUGLAS CNTY NE SAN & IMPT					3/1/2026	11/15/2016	170,000.00	170,000.00	170,000.00	165,663.89	165,663.89
D02/02						100.000	AFS	170,000.00	100.00%	170,000.00	1,351.50	167,015.39
MUNI	25931VBN1		3.500	NE	185142866-1	Contin	8/15/2032					
GO	DOUGLAS CNTY NE SAN & IMPT					3/1/2026	7/27/2017	50,000.00	50,000.00	50,000.00	48,406.91	48,406.91
D02/02						100.000	AFS	50,000.00	100.00%	50,000.00	77.78	48,484.69

Report reflects information submitted to Stifel Bond Accounting by the customer. It is not intended to be used as the official record of safekeeping location and/or pledged holdings. See customer's Safekeeping Agent reports as needed.

Pledged Securities Detail
February 28, 2026

SGrp STyp Loc/Pl	CUSIP Description S&P	Moody	Rate	State	Ticket-P#	Call Type Next Call Dt Call Price	Maturity Dt Issue Dt Intent	Total Face Total Par	Pledge Values: Pledged Face % of Total	Par Value Book Value	Carrying Value Interest Rec	Market Value Collateral Value
MUNI	25931VCF7		2.350	NE	177020849-1	Cont	8/15/2035					
GO	DOUGLAS CNTY NEB SAN #471					3/1/2026	2/19/2021	100,000.00	100,000.00	100,000.00	90,956.30	90,956.30
D02/02						100.000	AFS	100,000.00	100.00%	100,000.00	104.44	91,060.74
MUNI	25933BEB6		3.000	NE	184003099-1	Cont	11/15/2035					
GO	DOUGLAS CNTY NEB SAN & IMPT DI					3/1/2026	5/19/2020	150,000.00	150,000.00	150,000.00	149,993.51	149,993.51
D02/02						100.000	AFS	150,000.00	100.00%	150,000.00	1,325.00	151,318.51
MUNI	25936RBY1		2.400	NE	177039345-1	Cont	1/15/2039					
GO	DOUGLAS CNTY NEB S&I #537					1/15/2027	1/21/2022	150,000.00	150,000.00	150,000.00	112,929.98	112,929.98
D02/02						100.000	AFS	150,000.00	100.00%	150,000.00	460.00	113,389.98
MUNI	25940TAX4		4.800	NE	177081763-1	Cont	12/15/2041					
GO	DOUGLAS CNTY NEB S&I #605					12/15/2030	12/18/2025	305,000.00	305,000.00	305,000.00	308,930.40	308,930.40
D02/02						100.000	AFS	305,000.00	100.00%	305,000.00	2,968.67	311,899.07
MUNI	373807CE4		1.850	NE	184010461-1	Cont	12/15/2035					
REV	GERING NEB COMBINED UTILS REV					4/29/2026	4/29/2021	100,000.00	100,000.00	100,000.00	78,735.29	78,735.29
D02/02						100.000	AFS	100,000.00	100.00%	100,000.00	390.56	79,125.85
MUNI	57973FDD8		3.150	NE	185181069-1	Contin	12/15/2030					
REV	MCCOOK NE PUBLIC PWR DIST					3/1/2026	8/9/2017	100,000.00	100,000.00	100,000.00	96,638.78	96,638.78
D02/02						100.000	AFS	100,000.00	100.00%	100,000.00	665.00	97,303.78
MUNI	80373YER3		2.800	NE	182012079-1	Cont	10/15/2035					
GO	SARPY CNTY NEB S&I #158					4/15/2027	4/19/2022	150,000.00	150,000.00	150,000.00	137,559.05	137,559.05
D02/02						100.000	AFS	150,000.00	100.00%	150,000.00	1,586.67	139,145.72
MUNI	80377BKT8		2.350	NE	184010680-1	Cont	8/15/2034					
GO	SARPY CNTY NEB S&I DIST #264					5/3/2026	5/3/2021	180,000.00	180,000.00	180,000.00	153,392.52	153,392.52
D02/02						100.000	AFS	180,000.00	100.00%	180,000.00	188.00	153,580.52
MUNI	80377TBE2		2.800	NE	185187220-1	Contin	11/15/2028					
GO	SARPY CNTY NE SAN & IMPT DIST					3/1/2026	11/15/2016	85,000.00	85,000.00	85,000.00	83,105.89	83,105.89
D02/02						100.000	AFS	85,000.00	100.00%	85,000.00	700.78	83,806.67
MUNI	80377TBF9		2.900	NE	185187221-1	Contin	11/15/2029					
GO	SARPY CNTY NE SAN & IMPT DIST					3/1/2026	11/15/2016	85,000.00	85,000.00	85,000.00	82,389.99	82,389.99
D02/02						100.000	AFS	85,000.00	100.00%	85,000.00	725.81	83,115.80
MUNI	80378TEW8		3.850	NE	185187230-1	Contin	10/15/2033					
GO	SARPY CNTY NE SAN & IMPT DIST					3/1/2026	4/15/2018	85,000.00	85,000.00	85,000.00	83,829.28	83,829.28
D02/02						100.000	AFS	85,000.00	100.00%	85,000.00	1,236.28	85,065.56

Report reflects information submitted to Stifel Bond Accounting by the customer. It is not intended to be used as the official record of safekeeping location and/or pledged holdings. See customer's Safekeeping Agent reports as needed.

Report Sequence: sgrp, CUSIP, Ticket

SGrp / STyp / Loc/Pl	CUSIP / Description / S&P	Moody	Rate	State	Ticket-P#	Call Type / Next Call Dt / Call Price	Maturity Dt / Issue Dt / Intent	Total Face / Total Par	Pledge Values: Pledged Face / % of Total	Par Value / Book Value	Carrying Value / Interest Rec	Market Value / Collateral Value
MUNI	80379KEN6		2.300	NE	177018881-1	Cont	12/15/2034					
GO	SARPY CNTY NEB SAN & IMPT #272					3/1/2026	1/11/2021	50,000.00	50,000.00	50,000.00	41,978.36	41,978.36
D02/02						100.000	AFS	50,000.00	100.00%	50,000.00	242.78	42,221.14
MUNI	818483FG9		2.450	NE	185187557-1	Contin	2/15/2028					
REV	SEWARD NE ELEC REV					3/1/2026	6/15/2016	150,000.00	150,000.00	150,000.00	146,147.44	146,147.44
D02/02						100.000	AFS	150,000.00	100.00%	150,000.00	163.33	146,310.77
MUNI	886094CD1		2.500	NE	184003102-1	Cont	12/15/2035					
GO	THURSTON CNTY NEB					3/1/2026	5/28/2020	200,000.00	200,000.00	200,000.00	168,469.88	168,469.88
D02/02						100.000	AFS	200,000.00	100.00%	197,969.56	1,055.56	169,525.44
TAX	534239FX1		3.000	NE	177045043-1		7/15/2026					
TAXGO	LINCOLN NEB						8/20/2020	100,000.00	100,000.00	100,000.00	99,677.65	99,677.65
D02/02	AAA						AFS	100,000.00	100.00%	99,940.28	383.33	100,060.98
CITY OF SEWARD									24,921,805.29	4,268,776.41 4,276,373.29	4,009,515.27 21,638.22	4,009,515.27 4,031,153.48

CASH IN BANK $8,342,013.93

Report reflects information submitted to Stifel Bond Accounting by the customer. It is not intended to be used as the official record of safekeeping location and/or pledged holdings. See customer's Safekeeping Agent reports as needed.

4. Police Department Report

City of Seward
Police Department

Monthly Statistics
February 2025

Service Calls	508
Accidents	10
Arrests	11
Citations	31
Warnings	106
Parking Tickets	13

Does not include red tag warnings, yellow tag warnings or verbal warnings

5. Draft Minutes of March 3, 2026, City Council Meeting

March 3, 2026

The Seward City Council met at 7:00 p.m. on Tuesday, March 3, 2026, with Mayor Joshua Eickmeier presiding and City Clerk Derek Bargmann recording the proceedings. Upon roll call, the following Councilmembers were present: Zane Francescato, Megan Kahler, Jessica Kolterman, John Singleton, Matt Stryson, Tatum Tonniges, Rich Wergin. Councilmembers absent: Karl Miller. Other officials present: City Administrator Greg Butcher, City Attorney Kelly Hoffschneider, City Engineer Mike Oneby, Water/Wastewater Director Brandon Koll, and Chief of Police Brian Peters.

Notice of the meeting was given in advance thereof, and Mayor Eickmeier announced that a copy of the Open Meetings Act and tonight's agenda is posted in the meeting room and is accessible to members of the public. Mayor Eickmeier led those in attendance in the Pledge of Allegiance.

CONSENT AGENDA CONSIDERATION ITEMS

The following Consent Agenda items were approved in one single motion made by Councilmember Wergin, seconded by Councilmember Singleton.

1. Claims & Payables Report (totaling $371,864.19)
2. Seward County Chamber & Development Partnership Report
3. Draft Minutes of February 17, 2026, City Council Meeting
4. Mayor Appointments to Boards and Commissions:
    a. Re-Appoint Ryne Seaman to the Community Redevelopment Authority for a 5-Year Term
    b. Re-Appoint Ann Underwood and Trish Johnson to the LB840 Sales Tax Application Review Board for a 3-Year Term
    c. Re-Appoint Megan Kahler to the Seward County Chamber & Development Partnership Board for a 3-Year Term

Aye: Francescato, Kahler, Kolterman, Singleton, Stryson, Tonniges, Wergin.
Nay: None. Absent: Miller. Motion carried.

PUBLIC HEARINGS

1. PRESENTATION AND DISCUSSION OF FUNCTIONING AND PRGORESS OF THE SEWARD ECONOMIC DEVELOPMENT PLAN

City Administrator Greg Butcher delivered the report through December 31, 2025, as was presented to the Citizens Advisory Review Committee on February 11th. He noted that no recommendations were brought forward by the Committee at this time. The public hearing was opened at 7:05 p.m. With no public comment received, it was closed at 7:05 p.m.

Councilmember Stryson moved, seconded by Councilmember Francescato, to approve the Seward Economic Development Plan report through December 31, 2025, as presented.

Aye: Francescato, Kahler, Kolterman, Singleton, Stryson, Tonniges, Wergin.
Nay: None. Absent: Miller. Motion carried.

ADMINISTRATIVE ITEMS

1. ITEMS RELATED TO THE WASTEWATER TREATMENT PLANT FACILITY IMPROVEMENTS PROJECT

A. CONSIDERATION OF APPROVAL OF AMENDMENT #4 IN THE AMOUNT OF $630,209.00 TO THE AGREEMENT WITH SEH, INC. FOR DESIGN AND BIDDING SERVICES

Colin Marcusen, project engineer from SEH, Inc., noted that the previous design was being altered due to the inclusion of DARI LLC as a large system user. The revision of the design was included in the proposed amendment presented by SEH. Upon reviewing timelines with DARI coming online and the expected WW Treatment Plant completion, it was determined the City should utilize a temporary treatment system to not overwhelm the existing infrastructure. The finalized design plans were expected in June with bidding expected in the fall.

Councilmember Wergin moved, seconded by Councilmember Francescato, to approve an amendment with SEH, Inc. for design and bidding services related to the Wastewater Treatment Plant Facility Improvements Project.

Aye: Francescato, Kahler, Kolterman, Singleton, Stryson, Tonniges, Wergin.
Nay: None. Absent: Miller. Motion carried.

B. CONSIDERATION OF APPROVAL OF A 24-MONTH RENTAL AGREEMENT ($2,026,200 TOTAL) WITH AQUA AEROBIC SYSTEMS, INC. FOR A TEMPORARY TREATMENT SYSTEM REQUIRE BY DWEE FOR DARI LLC WASTEWATER

Mr. Marcusen described the proposed temporary treatment system at length. He noted the 2nd Street Lift Station site would likely require some pad creation and utility work for installation. A rental agreement was preferred to capital construction due to the temporary need for the service and the fact that the system would not be needed after the WWTP is brought online. There would also be little to no resale value. Additionally, it was noted the rental agreement was monthly, but the collection of fees from DARI would allow for some offset of costs. The system is expected by spring 2027.

Councilmember Francescato moved, seconded by Councilmember Tonniges, to approve a 24-month rental agreement with Aqua Aerobic Systems, Inc. for a temporary treatment system concurrent to the Wastewater Treatment Plant Facility Improvements Project.

Aye: Francescato, Kahler, Kolterman, Singleton, Stryson, Tonniges, Wergin.
Nay: None. Absent: Miller. Motion carried.

2. CONSIDERATION OF A CHANGE ORDER (#1) WITH VAN KIRK BROS. CONTRACTING FOR THE WORTHMAN BLVD WATERMAIN PHASE III PROJECT, INCREASING BY $43,792.85

City Engineer Oneby indicated the change order included the inclusion of casing around the pipe to be installed under the railway. The casing would lessen the risk of leaks and possible site erosion. Additionally, the proposal included a piping extension northward by seven feet to avoid the BNSF right-of-way and lessen the need for flagging during construction, thus potentially reducing costs.

Councilmember Tonniges moved, seconded by Councilmember Kolterman, to approve a change order with Van Kirk Bros. Contracting for the Worthman Blvd. Watermain Phase III Project.

Aye: Francescato, Kahler, Kolterman, Singleton, Stryson, Tonniges, Wergin.
Nay: None. Absent: Miller. Motion carried.

3. PRESENTATION AND ACCEPTANCE OF SEWARD POLICE DEPARTMENT ANNUAL REPORT

Chief of Police Peters presented the annual report. The department remains fully staffed with an average of 14 years experience per officer. Seward continues to have one of the lowest crime rate for cities its size and above.

Councilmember Wergin moved, seconded by Councilmember Francescato, to approve the 2025 Seward Police Department annual report as presented.

Aye: Francescato, Kahler, Kolterman, Singleton, Stryson, Tonniges, Wergin.
Nay: None. Absent: Miller. Motion carried.

4. CONSIDERATION OF A RESOLUTION TO REVISE CEMETERY FEES/POLICIES

City Clerk Bargmann noted a few inaccuracies existed from the previous resolution, 2026-5; therefore, a final resolution is presented to reflect the recommendations from City staff and the Cemetery Board.

Councilmember Stryson introduced **Resolution No. 2026-6**, to enact revisions to the Seward cemetery fees and policies. Councilmember Francescato moved, seconded by Councilmember Kahler, to approve the resolution as presented.

Aye: Francescato, Kahler, Kolterman, Singleton, Stryson, Tonniges, Wergin.
Nay: None. Absent: Miller. Motion carried.

5. CONSIDERATION OF A RESOLUTION TO DESIGNATE ITEMS AS SURPLUS

Councilmember Kahler introduced **Resolution No. 2026-7**, to designate City items as surplus. Councilmember Francescato moved, seconded by Councilmember Singleton, to approve the resolution as presented.

Aye: Francescato, Kahler, Kolterman, Singleton, Stryson, Tonniges, Wergin.
Nay: None. Absent: Miller. Motion carried.

CITY ADMINISTRATOR'S REPORT

Councilmember Wergin moved, seconded by Councilmember Kahler, that the City Administrator's report of March 3, 2026, be accepted.

Aye: Francescato, Kahler, Kolterman, Singleton, Stryson, Tonniges, Wergin.
Nay: None. Absent: Miller. Motion carried.

MOTION TO ADJOURN

Councilmember Singleton moved, seconded by Councilmember Kahler, that the March 3, 2026, City Council Meeting be adjourned.

Aye: Francescato, Kahler, Kolterman, Singleton, Stryson, Tonniges, Wergin.
Nay: None. Absent: Miller. Motion carried.

Adjourned approximately 8:06 p.m.

THE CITY OF SEWARD, NEBRASKA

_____
Joshua Eickmeier, Mayor

_____
Derek Bargmann, City Clerk

PUBLIC HEARINGS

1. Public Hearing - 7:00 PM - Consideration of an Ordinance to Revise the City's Unified Land Development Ordinance (ULDO); Article 3 Use Types; Chapter 410-3.9 Industrial Uses; Chapter 410 Attachment 1 - Use Matrix, and Article 31 Supplemental Use Regulation (410-31.6) - Building/Zoning & Code Enf. Director Dworak

ORDINANCE NO. 2026-

AN ORDINANCE TO AMEND THE MUNICIPAL CODE OF THE CITY OF SEWARD, CHAPTER 410 ZONING AND SUBDIVISION, ARTICLE 3 USE TYPES, 410-3.9 INDUSTRIAL USE TYPES; TO AMEND ARTICLE 31 SUPPLEMENTAL USE REGULATIONS, 410-31.6 INDUSTRTIAL USES; TO AMMEND ATTACHMENT 1 USE MATRIX; TO REPEAL ALL ORDINANCES OR PARTS OF ORDINANCES IN CONFLICT; TO PROVIDE FOR AN EFFECTIVE DATE; TO PROVIDE FOR PUBLICATION OF THIS ORDINANCE IN PAMPHLET FORM.

BE IT ORDAINED BY THE MAYOR AND CITY COUNCIL OF THE CITY OF SEWARD AS FOLLOWS:

That Chapter 410 of the Municipal Code of the City of Seward is hereby amended as follows:

Section 1. That §410-3.9 to be amended as follows

§410-3.9 Industrial Uses Types.

Industrial use types include the on-site extraction or production of goods by nonagricultural methods, and the storage and distribution of products.

A. Agricultural industry: establishments which include the storage, manufacture, sale, or distribution of agricultural supplies or products that create major external effects, including substantial truck or rail traffic and/or significant potential for hazard. Typical uses include grain elevators and storage of agricultural chemicals such as anhydrous ammonia. Agricultural industries do not include retailers of farm equipment or other, generally nonhazardous agricultural supplies.

B. Construction yards: establishments housing facilities of businesses primarily engaged in construction activities, including incidental storage of materials and equipment on lots other than construction sites. Typical uses are building contractor's yards.

C. Custom manufacturing:

(1) Establishments primarily engaged in the on-site production of goods by hand manufacturing, within enclosed structures, involving:

(a) The use of hand tools; or

(b) The use of domestic mechanical equipment not exceeding two horsepower; or

(c) A single kiln not exceeding 8 KW or equivalent.

(2) This category also includes the incidental direct sale to consumers of only those goods produced on site. Typical uses include ceramic studios, custom jewelry manufacturing, and candle-making shops.

D. <u>Data Center: a centralized repository engaging in the storage, management, processing, conversion, data mining, and/or dissemination of digital data and information, and housing computer and/or network equipment, systems, servers, appliances, and other associated components related to digital data operations.</u>

E. Light industry: establishments engaged in the manufacture or processing of finished products from previously prepared materials, including processing, fabrication, assembly, treatment, and packaging of such products, and

incidental storage, sales, and distribution. These establishments are characterized by having no major external environmental effects across property lines and include no unscreened or unenclosed outdoor storage. Typical uses include commercial bakeries, dressed beef processing plants, soft drink bottling, apparel assembly from fabrics, electronics, manufacturing, print shops and publishing houses.

F. General industry: enterprises engaged in the processing, manufacturing, compounding, assembly, packaging, treatment or fabrication of materials and products from prepared materials or from raw materials without noticeable noise, odor, vibration, or air pollution effects across property lines, but often including outdoor storage of materials or products.

G. Heavy industry: enterprises involved in the basic processing and manufacturing of products, predominately from raw materials, with noticeable noise, odor, vibration, or air pollution effects across property lines; or a use or process engaged in the storage of or processes involving potentially or actually hazardous, explosive, flammable, radioactive, or other commonly recognized hazardous materials.

H. Recycling collection: any site which is used in whole or part for the receiving or collection of any post-consumer, nondurable goods, including, but not limited to, glass, plastic, paper, cardboard, aluminum, tin, or other recyclable commodities.

I. Recycling processing: any site which is used for the processing of any post-consumer, nondurable goods, including, but not limited to, glass, plastic, paper, cardboard, aluminum, tin, or other recyclable commodities.

J. Resource extraction: a use involving on-site extraction of surface or subsurface mineral products or natural resources, excluding site grading for a specific construction project or preparation of a site for subsequent development. Typical uses are quarries, borrow pits, sand and gravel operations, mining, and removal of dirt for off-site use.

K. Salvage services: places of business engaged in the storage, sale, dismantling or other processing of used or waste materials that are not intended for reuse in their original forms. Typical uses include automotive wrecking yards, junkyards, or paper salvage yards.

L. Vehicle storage: storage of operating or nonoperating vehicles. Typical uses include storage of private parking tow-aways, impound yards, and personal RV and vehicle storage facilities but exclude dismantling, salvage, and individual storage or parking vehicles on primary residence property per ULDO Article 34. [Amended 2-8-2019 by Ord. No. 2019-05]

M. Warehousing (enclosed): uses including storage, distribution, and handling of goods and materials within enclosed structures. Typical uses include wholesale distributors, storage warehouses, and van and storage companies.

N. Warehousing (open): uses including open-air storage, distribution, and handling of goods and materials. Typical uses include monument yards, grain elevators, and open storage.

Section 2. That §410-31.5 to be amended as follows

§410-31.6 Industrial Uses.

A. Data Center.
Any business that operates as a data center per the definition, that requires 65 kilowatts of electrical capacity, must comply with the following regulations:

(1) Applicants shall be responsible for all costs to extend infrastructure to the data center site.
(2) Any water cooling must use a closed loop or recycled water system.
  (a) Cooling water flushing and refills are limited to times and procedures approved by the City of Seward Water/Wastewater Director.
(3) Generators
  (a) Generators are to run during electrical outages and testing only.
  (b) Routine generator exercise maintenance is limited to Monday -Friday between the hours of 8a.m. and 5p.m.
  (c) Battery Energy Storage Systems are permitted.
(4) Parking shall be calculated according to 410-34.3, Schedule A, office requirements.
(5) Fencing shall not be placed in front of landscaping.
(6) No operation shall generate sound levels in excess of 65 dbA between the hours of 7:00 a.m. and 10:00 p.m., and 55 dbA between the hours of 10:00 p.m. and 7:00 a.m., measured at the property line. All noises shall be muffled so as not to be objectionable because of intermittence, beat frequency, or shrillness.
  (a) This requirement shall not apply in the case of emergency generator use or testing.

(7) C-1 District Regulations.
  (a) Data Center not to exceed 2,000 square feet of gross floor area per building site or business campus and not to exceed 5 MW of electrical capacity.
  (b) Tree plantings adjacent to public roads shall be placed every 20 linear feet or fraction thereof. Tree plantings adjacent to shared property lines shall be placed every 100 linear feet or fraction thereof.
  (c) Generators must be fully screened
  (d) Fenestration is at 30 percent of each exterior wall.

(8) C-2 Districts Regulations.
  (a) Data Center not to exceed 20,000 square feet of gross floor area per building site or business campus and not to exceed 20 MW of electrical capacity.
  (b) Tree plantings adjacent to public roads shall be placed every 35 linear feet or fraction thereof. Tree plantings adjacent to shared property lines shall be placed every 100 linear feet or fraction thereof.
  (c) Generators must be enclosed within a building or fully screened.
  (d) Fenestration is at least 30 percent of the frontage façade.
  (e) Frontage facades must incorporate the following standards at horizontal linear intervals that may vary in frequency but be no less frequent than every 100 horizontal linear feet or no less than 3 times the average height of the building:
    (1) A change in one of the following design elements:
      (a) Building Material

(b) Pattern
(c) Texture
(d) Color
(e) Accent Materials

(9) I-1 District Regulations.
(a) Data Center not to exceed 100,000 square feet of gross floor area per building site or business campus and not to exceed 100 MW electrical capacity.
(b) Tree plantings adjacent to public roads shall be placed every 50 linear feet or fraction thereof. Tree plantings adjacent to shared property lines shall be placed every 100 linear feet or fraction thereof.
(c) Generators must be enclosed within a building.
(d) Fenestration is at least 30 percent of the frontage façade.
(e) Frontage facades must incorporate the following standards at horizontal linear intervals that may vary in frequency but be no less frequent than every 150 horizontal linear feet or no less than 3 times the average height of the building:
(1) A change in one of the following design elements:
(a) Building Material
(b) Pattern
(c) Texture
(d) Color
(e) Accent Materials
(f) A decommissioning plan must be submitted.
(1) Future parking requirements shall be outlined.

(10) I-2 Districts Regulations.
(a) Data center not to exceed 500,000 square feet of gross floor area per building site or business campus.
(b) Tree plantings adjacent to public roads shall be placed every 30 linear feet or fraction thereof. Tree plantings adjacent to shared property lines shall be placed every 100 linear feet or fraction thereof.
(c) Generators must be enclosed within a building.
(d) Fenestration is at least 30 percent of the frontage façade.
(e) Frontage facades must incorporate the following standards at horizontal linear intervals that may vary in frequency but be no less frequent than every 150 horizontal linear feet or no less than 3 times the average height of the building:
(1) A change in one of the following design elements:
(a) Building Material
(b) Pattern
(c) Texture
(d) Color
(e) Accent Materials
(f) A decommission plan must be submitted.
(1) Future parking requirements shall be outlined.

B. Resource extraction. Resource extraction, where permitted, is subject to the following additional requirements:
(1) Erosion control. A resource extraction use may not increase the amount of storm run-off onto adjacent properties as determined by review of the Zoning Administrator. Erosion control facilities, including

retention and sediment basins, are required of each facility, if necessary, to meet this standard.

(2) Surface drainage. The surface of the use may not result in the collection or ponding of water, unless specifically permitted as part of a conditional use permit.

(3) Storage of topsoil. Topsoil shall be collected and stored for redistribution following the end of the operation.

(4) Elimination of hazards. Excavation shall not result in a hazard to any person or property. The following measures are required:

(a) Restoration of slopes to a gradient not exceeding 33% as soon as possible.

(b) Installation of perimeter safety screening and/or fencing.

(c) Installation of visual screening adjacent to any property within a residential or public use district consistent with bufferyard standards contained in Article 33. Resource extraction uses in the AG District shall be subject to the same bufferyard requirements as those in the I-2 District.

(5) Restoration of landscape. The topography and soil of the resource extraction site shall be restored and stabilized within nine months of completion of the operation. The site shall be seeded, planted, and contoured in a way that prevents erosion. Alternately, the site may be used as a lake or body of water, subject to approval by the City Council with the recommendation of the Planning Commission and the appropriate Natural Resources District.

C. Salvage services and long-term vehicle storage and dismantling.

(1) Screening.

(a) The perimeter of each new facility shall be fully enclosed by opaque, freestanding fencing or screen walls. The minimum height of this enclosure shall be eight feet. Any such enclosure shall be constructed behind required landscaped bufferyards.

(b) Each existing salvage services facility shall be screened as provided above within one year of the effective date of this chapter.

(c) The above requirement shall also apply to uses adjacent to residential zoning districts or residential uses that include the long-term storage and dismantling of vehicles.

(2) Storage of materials within any salvage services facility may not be higher than the height of the surrounding screen fence or wall.

(3) No new salvage services use may be established within 500 feet of the nearest property line of a preexisting residential zoning district or of any pre-established civic use.

D. Vehicle storage.

(1) Setback: All vehicle storage facilities shall be set back a minimum of 300 feet from the right-of-way of Highways 15 and 34.

(2) Fencing: All vehicle storage facilities will have a secure fencing system made from approved materials set forth herein.

(3) Screening: All vehicle storage facilities when adjacent to a lower density zoning district shall utilize screening as set forth in Article 33.

(4) Mobilization: All vehicles in a vehicle storage facility shall be operable and able to legally travel upon the streets and highways of the City of Seward and State of Nebraska.

Section 3. That Attachment 1 Use Matrix is amended as follows

410 Attachment 1

City of Seward

Use Matrix
[Amended 11-20-2018 by Ord. No. 2018-19; 2-8-2019 by Ord. No. 2019-05; 2-19-2019 by Ord. No. 2019-04; 7-16-2019 by Ord. No. 2019-21; 6-16-2020 by Ord. No. 2020-13; 11-17-2020 by Ord. No. 2020-31; 7-6-2021 by Ord. No. 2021-15; 8-17-2021 by Ord. No. 2021-18; 10-4-2022 by Ord. No. 2022-17; 9-16-2025 by Ord. No. 2025-24]

KEY:

P	Permitted by right or by right subject to supplemental regulations
S	Permitted by conditional use permit (§ 410-44.3)
S(x)	Expansion of an existing use is permitted subject to approval of a conditional use permit
E	Permitted by right if lawfully existing on the effective date of this chapter
Blank	Use not permitted in zoning district
*	Use subject to site plan review (§ 410-44.2)

Use Types	Impact Rating	AG	RR	R-1	R-2	R-3	R-4	RM	UC	C-1	C-2	CBD	BP	I-1	I-2	Supplemental Regulations
Agricultural Uses																
Horticulture	L	P	P													§ 410-31.2
Crop production	L	P	P													§ 410-31.2
Animal production	M	P	P													§ 410-31.2
Confined animal feeding operations	I	S(x)														§§ 410-31.2, 410-31.3
Livestock sales	H	S														
Residential Uses																
Single-family detached	L	P	P	P	P	P	P	P	P	P	S/E	S/E	E	E	E	
Single-family attached	L			P	P	P	P	P	P	P	S/E	S/E	E	E	E	
Duplex	L			P	P	P	P	P	P	P	S	S	E	E	E	
Two-family*	L			S	S	P	P	S	P	S	S	S				
Townhouse*	L				P	P	P	S	P	P	S	P	E	E	E	
Multiple-family*	M					S	P		P	P	S	P	E	E	E	
Downtown residential*	L								P			P				§ 410-31.3

Use Types	Impact Rating	AG	RR	R-1	R-2	R-3	R-4	RM	UC	C-1	C-2	CBD	BP	I-1	I-2	Supplemental Regulations
Group residential*	M	S			S	S	P	S	S	S/E	E	E	E	E	E	§ 410-31.3
Boardinghouse*	M						S		S	E	E	E	E	E	E	
Manufactured housing residential	L	P	P	P	P	P	P	P	P	P	S/E	S	E	E	E	
Mobile home park*	M							P								§ 410-31.3
Mobile home subdivision	L							P								§ 410-31.3
Retirement residential*	M	S	S	S	P	P	P	S	P	S	S	P				
Civic Uses																
Administration	L	P	S		S	S	P	S	P	P	P	P	P	P	P	
Cemetery*	L	S	S	S	S	S	S	S								
Clubs (recreational)*	L	S	S	S	S	S	P	S	P	P	P	P	P	P	P	§ 410-31.4
Clubs (social)*	M	S	S	S	S	S	P	S	P	P	P	P	P	P	P	§ 410-31.4
College/University*	H	S	S	S	S	S	S	S	S	P	P	P	P	P		
Convalescent services*	L	S	S	S	S	S	P	S	P	P	P	S	S			
Cultural services*	M	P	P	P	P	P	P	P	P	P	P	P	P	P	P	
Day care (limited)	L	P	P	P	P	P	P	P	P	P	P	P	P	P	P	§ 410-31.4
Day care (general)*	M	S	S	S	S	S	P	P	P	P	P	P	P	P	P	§ 410-31.4
Detention facilities*	I	S									S	S		S	S	
Emergency residential	L	P	P	P	P	P	P	P	P	P	P	P				
Group-care facility*	M			S	S	P	P	S	P	P	P	P				§ 410-31.4
Group home	L	P	P	P	P	P	P	P	P	P	P	P				§ 410-31.4
Guidance services	L					S	P	S	P	P	P	P	P	P	P	
Health care*	M	S			S	S	P	S	P	P	P	P	P	P	P	
Hospitals*	I	S			S	S	S		S	S	P	P	P	S	S	
Maintenance facility*	H	S	S				S			S	P	S	P	P	P	
Park and recreation	L	P	P	P	P	P	P	P	P	P	P	P	P	P	P	
Postal facilities*	M					S	S		P	P	P	P	P	P	P	
Primary education*	H	P	P	P	P	P	P	P	P	P	S	S				

Use Types	Impact Rating	AG	RR	R-1	R-2	R-3	R-4	RM	UC	C-1	C-2	CBD	BP	I-1	I-2	Supplemental Regulations
Public assembly*	H								S	S	P	P	S	P	P	
Religious assembly*	M	P	S	S	S	S	S	S	P	P	P	P	P	P	C	
Safety services*	M	P	P	P	P	P	P	P	P	P	P	P	P	P	P	
Secondary education*	I	S	S	S	S	S	P	S	P	S	P	S	S	S		
Utilities*	M	P	S	S	S	S	S	S	S	S	P	S	P	P	P	
Office Uses																
Corporate offices*	M					S	S		P	P	P	P	P	P	P	
General offices	M					S	S		P	P	P	P	P	P	P	
Financial services A	L						S		P	P	P	P	P	P	P	
Financial services B*	M								S	P	P	P	P	P	P	
Medical offices A	L						S		P	P	P	P	P	P	P	
Medical offices B*	M						S		P	P	P	P	P	P	P	
Commercial Uses																
Agricultural sales/service*	H	S									P		S	P	P	
Auto auction lots*	H										S			P	P	§ 410-31.5
Auto rental/sales*	H									S	P	P	S	P	P	§ 410-31.5
Auto services*	H								S	S	P	P	P	P	P	§ 410-31.5
Aviation maintenance repair*	M										S			P	P	§ 410-31.5
Body repair*	I										P	S	S	P	P	§ 410-31.5
Dog day care	M	S	S						S	S	S	S		S		§ 410-31.5
Equipment rental/sales*	H									S	P	S	S	P	P	§ 410-31.5
Equipment repair*	H										P	S		P	P	§ 410-31.5
Bed-and-breakfast*	L	S	S	S	P	P	P	S	P	P	P	P	S	S	S	§ 410-31.5
Business support services*	M						S		P	P	P	P	P	P	P	
Business/Trade school*	H						S		P	S	P	P	P	P	P	
Campground*	M	S	S								S					§ 410-31.5
Cocktail lounge*	H									S	P	P	P	P	P	
Commercial recreation	H									S	P	P	P	P	P	

Use Types	Impact Rating	AG	RR	R-1	R-2	R-3	R-4	RM	UC	C-1	C-2	CBD	BP	I-1	I-2	Supplemental Regulations
(controlled-impact)*																
Commercial recreation (high-impact)*	H	S									P		S	P	P	
Communication service*	M					S			P	S	P	P	P	P	P	
Construction sales/service*	H										P	S	P	P	P	§ 410-31.5
Consumer service*	M								P	P	P	P	P	P	P	
Convenience storage*	H						S					P	P	P	P	§ 410-31.5
Food sales (convenience)*	H								S	P	P	P	S	P	S	
Food sales (limited)*	L								P	P	P	P	S			
Food sales (general)*	M								S	P	P	P	S	P		
Food sales (supermarkets)*	I									S	P	S				
Funeral service*	M				S	S	P		P	P	P	P	P	P	P	
Gaming facilities*	H									S	P	P		P	P	
Kennels*	M	S	S								S			P	P	§ 410-31.5
Laundry services*	H										P	P	P	P	P	
Liquor sales*	H									S	P	P		P		
Lodging*	H								S	S	P	P	P			
Personal improvement	M						S		P	P	P	P	P	P	P	
Personal services*	M						S		P	P	P	P	P	P	P	
Pet services*	M								P	P	P	P	P	P		
Research services*	M								S	S	P	P	P	P	P	
Restaurants (drive-through or fast-food)*	H								S	S	S	S	S	S	S	
Restaurants (general)*	H								P	P	P	P	P	P	P	
Restricted business*	I										S			P	P	§ 410-31.5
Retail services (limited)	M								P	P	P	P	P			
Retail services (medium)	M								P	P	P	P	P			
Retail services (large)*	H								S	S	S	S				
Retail services (mass)*	I									S	S					

Use Types	Impact Rating	AG	RR	R-1	R-2	R-3	R-4	RM	UC	C-1	C-2	CBD	BP	I-1	I-2	Supplemental Regulations
Stables*	M	P	S													
Surplus sales*	I										P		P	P	P	
Trade services*	M								S	S	P	S	P	P	P	
Travel centers	H									S	P		S	P	P	§ 410-31.5
Truck stops	I										S		S	S	P	§ 410-31.5
Veterinary services (general)*	M	S	S						P	P	P	P	P	P	P	
Veterinary services (large animal)	H	S												P	P	
Parking Uses																
Off-street parking*	H								S		P	S		P	P	
Parking structure*	H									S	P	P	P	P	P	
Transportation Uses																
Aviation (general)*	I	S											S	S	P	
Aviation (private)*	M	S	S											S	S	
Railroad facilities*	I											S	S	P	P	
Truck terminal*	H													S	P	
Transportation terminal*	H									S	P	P	P	P	P	
Industrial Uses																
Agricultural industry*	I	S												S	P	
Construction yards*	H													P	P	
Custom manufacturing	M								S	S	P	P	P	P	P	
Data Center*	M									S	S			S	S	§ 410-31.6
Light industry*	M												S	P	P	
General industry*	H													P	P	
Heavy industry*	I														S	
Recycling collection*	M									S	P	S	S	P	P	
Recycling processing*	H										S			P	P	
Resource extraction*	I	S													S	§ 410-31.6
Salvage services*	I	S													S	§ 410-31.6

Use Types	Impact Rating	AG	RR	R-1	R-2	R-3	R-4	RM	UC	C-1	C-2	CBD	BP	I-1	I-2	Supplemental Regulations
Vehicle storage*	H													S	S	§ 410-31.6
Warehousing (enclosed)*	M	S									S	S	P	P	P	
Warehousing (open)*	H													S	P	
Miscellaneous Uses																
Amateur radio tower	L	P	P	P	P	P	P	P	P	P	P	S	P	P	P	
Communications tower	M	S	S						S		S	S	P	P	P	
Construction batch plant*	H													S	P	
Landfill (nonputrescrible)*	H	S													S	§ 410-31.9
Landfill (putrescible)*	I															§ 410-31.9
WECS	L	P	S	S	S	S	S	S	S	S	S	S	P	P	P	§ 410-31.9
Shipping containers	H	P									S		S	P	P	§ 410-31.13

SECTION 4. REPEAL. All ordinances or parts of ordinances in conflict herewith are hereby repealed.

SECTION 5. WHEN OPERATIVE; PUBLICATION IN PAMPHLET FORM. This ordinance shall be published in pamphlet form and shall be in full force from and after its passage, approval and publication or posting as required by law.

Dated this _____ day of _____, 2026

CITY OF SEWARD, NEBRASKA

_____
Joshua Eickmeier, Mayor

ATTEST: _____
Derek Bargmann
City Clerk

City of Seward Board of Adjustments

142 N 7th St. Seward, NE 68434

Staff Report

Tim Dworak 402-643-4000

APPLICATION TYPE	FINAL ACTION?	DEVELOPER/OWNER
ULDO Amendment		

PC HEARING DATE	RELATED APPLICATIONS	PROPERTY ADDRESS, ZONING DISTRICT/USE
March 9, 2026		

BRIEF SUMMARY OF REQUEST

Review of a City of Seward Unified Land Development Ordinance (ULDO). Article 3 Use Types, 410-3.9 Industrial Uses; 410 Attachment 1 Use Matrix, and Article 31 Supplemental Use Regulation, 410-31.6; in reference to Data Centers

APPLICATION CONTACT

Tim Dworak

City of Seward - Building and Zoning

ANALYSIS

Attached are the proposed amendment red line changes to add Data Center definitions, criteria and zoning matrix additions.

This amendment change is to add a proposed use for Data Center uses and to define requirements for a conditional use permit in the supplemental uses and to update the use matrix for the appropriate zoning districts the use would be allowable in.

Currently the City of Seward zoning code does not specifically address Data Centers and where they should be allowed. They are currently considered under the industrial uses because of potentially high uses of public resources such as electricity and water. In addition, they have the ability to create a noise problem if located improperly next to a residential district.

The notice of this Public Hearing was posted in the Seward County Independent.

Prepared by

Tim Dworak

City of Seward Building - Zoning – Code Enforcement Director

§ 410-3.9. Industrial use types.

Industrial use types include the on-site extraction or production of goods by nonagricultural methods, and the storage and distribution of products.

A. Agricultural industry: establishments which include the storage, manufacture, sale, or distribution of agricultural supplies or products that create major external effects, including substantial truck or rail traffic and/or significant potential for hazard. Typical uses include grain elevators and storage of agricultural chemicals such as anhydrous ammonia. Agricultural industries do not include retailers of farm equipment or other, generally nonhazardous agricultural supplies.

B. Construction yards: establishments housing facilities of businesses primarily engaged in construction activities, including incidental storage of materials and equipment on lots other than construction sites. Typical uses are building contractor's yards.

C. Custom manufacturing:

(1) Establishments primarily engaged in the on-site production of goods by hand manufacturing, within enclosed structures, involving:

(a) The use of hand tools; or

(b) The use of domestic mechanical equipment not exceeding two horsepower; or

(c) A single kiln not exceeding 8 KW or equivalent.

(2) This category also includes the incidental direct sale to consumers of only those goods produced on site. Typical uses include ceramic studios, custom jewelry manufacturing, and candle-making shops.

D. Data Center: a centralized repository engaging in the storage, management, processing, conversion, data mining, and/or dissemination of digital data and information, and housing computer and/or network equipment, systems, servers, appliances, and other associated components related to digital data operations.

~~D.~~E. Light industry: establishments engaged in the manufacture or processing of finished products from previously prepared materials, including processing, fabrication, assembly, treatment, and packaging of such products, and incidental storage, sales, and distribution. These establishments are characterized by having no major external environmental effects across property lines and include no unscreened or unenclosed outdoor storage. Typical uses include commercial bakeries, dressed beef processing plants, soft drink bottling, apparel assembly from fabrics, electronics, manufacturing, print shops and publishing houses.

~~E.~~F. General industry: enterprises engaged in the processing, manufacturing, compounding, assembly, packaging, treatment or fabrication of materials and products from prepared materials or from raw materials without noticeable noise, odor, vibration, or air pollution effects across property lines, but often including outdoor storage of materials or products.

~~F.~~G. Heavy industry: enterprises involved in the basic processing and manufacturing of products, predominately from raw materials, with noticeable noise, odor, vibration, or air pollution effects across property lines; or a use or process engaged in the storage of or processes involving potentially or actually hazardous, explosive, flammable, radioactive, or other

Downloaded from https://ecode360.com/SE3620 on 2026-02-11

commonly recognized hazardous materials.

~~G.~~H. Recycling collection: any site which is used in whole or part for the receiving or collection of any post-consumer, nondurable goods, including, but not limited to, glass, plastic, paper, cardboard, aluminum, tin, or other recyclable commodities.

~~H.~~I. Recycling processing: any site which is used for the processing of any post-consumer, nondurable goods, including, but not limited to, glass, plastic, paper, cardboard, aluminum, tin, or other recyclable commodities.

~~I.~~J. Resource extraction: a use involving on-site extraction of surface or subsurface mineral products or natural resources, excluding site grading for a specific construction project or preparation of a site for subsequent development. Typical uses are quarries, borrow pits, sand and gravel operations, mining, and removal of dirt for off-site use.

~~J.~~K. Salvage services: places of business engaged in the storage, sale, dismantling or other processing of used or waste materials that are not intended for reuse in their original forms. Typical uses include automotive wrecking yards, junkyards, or paper salvage yards.

~~K.~~L. Vehicle storage: storage of operating or nonoperating vehicles. Typical uses include storage of private parking tow-aways, impound yards, and personal RV and vehicle storage facilities but exclude dismantling, salvage, and individual storage or parking vehicles on primary residence property per ULDO Article 34. **[Amended 2-8-2019 by Ord. No. 2019-05]**

~~L.~~M. Warehousing (enclosed): uses including storage, distribution, and handling of goods and materials within enclosed structures. Typical uses include wholesale distributors, storage warehouses, and van and storage companies.

~~M.~~N. Warehousing (open): uses including open-air storage, distribution, and handling of goods and materials. Typical uses include monument yards, grain elevators, and open storage.

Downloaded from https://ecode360.com/SE3620 on 2026-02-11

§ 410-31.6. Industrial uses.

A. Data Center.

Any business that operates as a data center per the definition, that requires 65 kilowatts of electrical capacity, must comply with the following regulations:

(1) Applicants shall be responsible for all costs to extend infrastructure to the data center site.

(2) Any water cooling must use a closed loop or recycled water system.

(a) Cooling water flushing and refills are limited to times and procedures approved by the City of Seward Water/Wastewater Director.

(3) Generators

(a) Generators are to run during electrical outages and testing only.

(b) Routine generator exercise maintenance is limited to Monday – Friday between the hours of 8a.m. and 5p.m.

(c) Battery Energy Storage Systems are permitted.

(4) Parking shall be calculated according to 410-34.3, Schedule A, office requirements.

(5) Fencing shall not be placed in front of landscaping.

(6) No operation shall generate sound levels in excess of 65 dbA between the hours of 7:00 a.m. and 10:00 p.m., and 55 dbA between the hours of 10:00 p.m. and 7:00 a.m., measured at the property line. All noises shall be muffled so as not to be objectionable because of intermittence, beat frequency, or shrillness.

(a) This requirement shall not apply in the case of emergency generator use or testing.

(7) C-1 District Regulations

(a) Data Centers not to exceed 2,000 square feet of gross floor area per building site or business campus and less than 5MW electrical capacity.

(b) Tree plantings adjacent to public roads shall be placed every 20 linear feet or fraction thereof. Tree plantings adjacent to shared property lines shall be placed every 100 linear feet or fraction thereof.

(c) Generators must be fully screened

(d) Fenestration is at 30 percent of each exterior wall.

(8) C-2 Districts Regulations

(a) Data Center not to exceed 20,000 square feet of gross floor area per building site or business campus and not to exceed 20 MW of electrical capacity.

(b) Tree plantings adjacent to public roads shall be placed every 35 linear feet or fraction thereof. Tree plantings adjacent to shared property lines shall be placed every 100 linear feet or fraction thereof.

(c) Generators must be enclosed within a building or fully screened.

(d) Fenestration is at least 30 percent of the frontage façade.

(e) Frontage facades must incorporate the following standards at horizontal linear intervals that may vary in frequency but be no less frequent than every 100 horizontal linear feet or no less than 3 times the average height of the building:

(1) A change in one of the following design elements:

(a) Building Material

(b) Pattern

(c) Texture

(d) Color

(e) Accent Materials

(9) I-1 District Regulations

(a) Data Center not to exceed 100,000 square feet of gross floor area per building site or business campus and not to exceed 100 MW electrical capacity.

(b) Tree plantings adjacent to public roads shall be placed every 50 linear feet or fraction thereof. Tree plantings adjacent to shared property lines shall be placed every 100 linear feet or fraction thereof.

(c) Generators must be enclosed within a building.

(d) Fenestration is at least 30 percent of the frontage façade.

(e) Frontage facades must incorporate the following standards at horizontal linear intervals that may vary in frequency but be no less frequent than every 150 horizontal linear feet or no less than 3 times the average height of the building:

(1) A change in one of the following design elements:

(a) Building Material

(b) Pattern

(c) Texture

(d) Color

(e) Accent Materials

(f) A decommissioning plan must be submitted.

(1) Future parking requirements shall be outlined.

(10) I-2 Districts Regulations

(a) Data center not to exceed 500,000 square feet of gross floor area per building site or business campus.

(b) Tree plantings adjacent to public roads shall be placed every 30 linear feet or fraction thereof. Tree plantings adjacent to shared property lines shall be placed every 100 linear feet or fraction thereof.

(c) Generators must be enclosed within a building.

(d) Fenestration is at least 30 percent of the frontage façade.

(e) Frontage facades must incorporate the following standards at horizontal linear intervals that may vary in frequency but be no less frequent than every 150 horizontal linear feet or no less than 3 times the average height of the building:

(1) A change in one of the following design elements:

(a) Building Material

(b) Pattern

(c) Texture

(d) Color

(e) Accent Materials

(f) A decommission plan must be submitted.

(1) Future parking requirements shall be outlined.

~~A.~~B. Resource extraction. Resource extraction, where permitted, is subject to the following additional requirements:

(1) Erosion control. A resource extraction use may not increase the amount of storm run-off onto adjacent properties as determined by review of the Zoning Administrator. Erosion control facilities, including retention and sediment basins, are required of each facility, if necessary, to meet this standard.

(2) Surface drainage. The surface of the use may not result in the collection or ponding of water, unless specifically permitted as part of a conditional use permit. **[Amended**

4-3-2018 by Ord. No. 2018-10]

(3) Storage of topsoil. Topsoil shall be collected and stored for redistribution following the end of the operation.

(4) Elimination of hazards. Excavation shall not result in a hazard to any person or property. The following measures are required:

(a) Restoration of slopes to a gradient not exceeding 33% as soon as possible.

(b) Installation of perimeter safety screening and/or fencing.

(c) Installation of visual screening adjacent to any property within a residential or public use district consistent with bufferyard standards contained in Article 33. Resource extraction uses in the AG District shall be subject to the same bufferyard requirements as those in the I-2 District.

(5) Restoration of landscape. The topography and soil of the resource extraction site shall be restored and stabilized within nine months of completion of the operation. The site shall be seeded, planted, and contoured in a way that prevents erosion. Alternately, the site may be used as a lake or body of water, subject to approval by the City Council with the recommendation of the Planning Commission and the appropriate Natural Resources District.

~~B.~~C. Salvage services and long-term vehicle storage and dismantling.

(1) Screening.

(a) The perimeter of each new facility shall be fully enclosed by opaque, freestanding fencing or screen walls. The minimum height of this enclosure shall be eight feet. Any such enclosure shall be constructed behind required landscaped bufferyards.

(b) Each existing salvage services facility shall be screened as provided above within one year of the effective date of this chapter.

(c) The above requirement shall also apply to uses adjacent to residential zoning districts or residential uses that include the long-term storage and dismantling of vehicles.

(2) Storage of materials within any salvage services facility may not be higher than the

height of the surrounding screen fence or wall.

(3) No new salvage services use may be established within 500 feet of the nearest property line of a preexisting residential zoning district or of any pre-established civic use.

~~C.~~D. Vehicle storage. **[Added 2-8-2019 by Ord. No. 2019-05]**

(1) Setback: All vehicle storage facilities shall be set back a minimum of 300 feet from the right-of-way of Highways 15 and 34.

(2) Fencing: All vehicle storage facilities will have a secure fencing system made from approved materials set forth herein.

(3) Screening: All vehicle storage facilities when adjacent to a lower density zoning district shall utilize screening as set forth in Article 33.

(4) Mobilization: All vehicles in a vehicle storage facility shall be operable and able to legally travel upon the streets and highways of the City of Seward and State of Nebraska.

410 Attachment 1

City of Seward

Use Matrix
[Amended 11-20-2018 by Ord. No. 2018-19; 2-8-2019 by Ord. No. 2019-05; 2-19-2019 by Ord. No. 2019-04; 7-16-2019 by Ord. No. 2019-21; 6-16-2020 by Ord. No. 2020-13; 11-17-2020 by Ord. No. 2020-31; 7-6-2021 by Ord. No. 2021-15; 8-17-2021 by Ord. No. 2021-18; 10-4-2022 by Ord. No. 2022-17; 9-16-2025 by Ord. No. 2025-24]

KEY:

P	Permitted by right or by right subject to supplemental regulations
S	Permitted by conditional use permit (§ 410-44.3)
S(x)	Expansion of an existing use is permitted subject to approval of a conditional use permit
E	Permitted by right if lawfully existing on the effective date of this chapter
Blank	Use not permitted in zoning district
*	Use subject to site plan review (§ 410-44.2)

Use Types	Impact Rating	AG	RR	R-1	R-2	R-3	R-4	RM	UC	C-1	C-2	CBD	BP	I-1	I-2	Supplemental Regulations
Agricultural Uses																
Horticulture	L	P	P													§ 410-31.2
Crop production	L	P	P													§ 410-31.2
Animal production	M	P	P													§ 410-31.2
Confined animal feeding operations	I	S(x)														§§ 410-31.2, 410-31.3
Livestock sales	H	S														
Residential Uses																
Single-family detached	L	P	P	P	P	P	P	P	P	P	S/E	S/E	E	E	E	
Single-family attached	L			P	P	P	P	P	P	P	S/E	S/E	E	E	E	
Duplex	L			P	P	P	P	P	P	P	S	S	E	E	E	
Two-family*	L			S	S	P	P	S	P	S	S	S				
Townhouse*	L				P	P	P	S	P	P	S	P	E	E	E	
Multiple-family*	M					S	P		P	P	S	P	E	E	E	
Downtown residential*	L								P			P				§ 410-31.3

Use Types	Impact Rating	AG	RR	R-1	R-2	R-3	R-4	RM	UC	C-1	C-2	CBD	BP	I-1	I-2	Supplemental Regulations
Group residential*	M	S			S	S	P	S	S	S/E	E	E	E	E	E	§ 410-31.3
Boardinghouse*	M						S		S	E	E	E	E	E	E	
Manufactured housing residential	L	P	P	P	P	P	P	P	P	P	S/E	S	E	E	E	
Mobile home park*	M							P								§ 410-31.3
Mobile home subdivision	L							P								§ 410-31.3
Retirement residential*	M	S	S	S	P	P	P	S	P	S	S	P				
Civic Uses																
Administration	L	P	S		S	S	P	S	P	P	P	P	P	P	P	
Cemetery*	L	S	S	S	S	S	S	S								
Clubs (recreational)*	L	S	S	S	S	S	P	S	P	P	P	P	P	P	P	§ 410-31.4
Clubs (social)*	M	S	S	S	S	S	P	S	P	P	P	P	P	P	P	§ 410-31.4
College/University*	H	S	S	S	S	S	S	S	S	P	P	P	P	P		
Convalescent services*	L	S	S	S	S	S	P	S	P	P	P	S	S			
Cultural services*	M	P	P	P	P	P	P	P	P	P	P	P	P	P	P	
Day care (limited)	L	P	P	P	P	P	P	P	P	P	P	P	P	P	P	§ 410-31.4
Day care (general)*	M	S	S	S	S	S	P	P	P	P	P	P	P	P	P	§ 410-31.4
Detention facilities*	I	S									S	S		S	S	
Emergency residential	L	P	P	P	P	P	P	P	P	P	P	P				
Group-care facility*	M			S	S	P	P	S	P	P	P	P				§ 410-31.4
Group home	L	P	P	P	P	P	P	P	P	P	P	P				§ 410-31.4
Guidance services	L					S	P	S	P	P	P	P	P	P	P	
Health care*	M	S			S	S	P	S	P	P	P	P	P	P	P	
Hospitals*	I	S			S	S	S		S	S	P	P	P	S	S	
Maintenance facility*	H	S	S				S			S	P	S	P	P	P	
Park and recreation	L	P	P	P	P	P	P	P	P	P	P	P	P	P	P	
Postal facilities*	M					S	S		P	P	P	P	P	P	P	
Primary education*	H	P	P	P	P	P	P	P	P	P	S	S				

Use Types	Impact Rating	AG	RR	R-1	R-2	R-3	R-4	RM	UC	C-1	C-2	CBD	BP	I-1	I-2	Supplemental Regulations
Public assembly*	H								S	S	P	P	S	P	P	
Religious assembly*	M	P	S	S	S	S	S	S	P	P	P	P	P	P	C	
Safety services*	M	P	P	P	P	P	P	P	P	P	P	P	P	P	P	
Secondary education*	I	S	S	S	S	S	P	S	P	S	P	S	S	S		
Utilities*	M	P	S	S	S	S	S	S	S	S	P	S	P	P	P	
Office Uses																
Corporate offices*	M					S	S		P	P	P	P	P	P	P	
General offices	M					S	S		P	P	P	P	P	P	P	
Financial services A	L						S		P	P	P	P	P	P	P	
Financial services B*	M								S	P	P	P	P	P	P	
Medical offices A	L						S		P	P	P	P	P	P	P	
Medical offices B*	M						S		P	P	P	P	P	P	P	
Commercial Uses																
Agricultural sales/service*	H	S									P		S	P	P	
Auto auction lots*	H										S			P	P	§ 410-31.5
Auto rental/sales*	H									S	P	P	S	P	P	§ 410-31.5
Auto services*	H								S	S	P	P	P	P	P	§ 410-31.5
Aviation maintenance repair*	M										S			P	P	§ 410-31.5
Body repair*	I										P	S	S	P	P	§ 410-31.5
Dog day care	M	S	S						S	S	S	S		S		§ 410-31.5
Equipment rental/sales*	H									S	P	S	S	P	P	§ 410-31.5
Equipment repair*	H										P	S		P	P	§ 410-31.5
Bed-and-breakfast*	L	S	S	S	P	P	P	S	P	P	P	P	S	S	S	§ 410-31.5
Business support services*	M						S		P	P	P	P	P	P	P	
Business/Trade school*	H						S		P	S	P	P	P	P	P	
Campground*	M	S	S								S					§ 410-31.5
Cocktail lounge*	H									S	P	P	P	P	P	
Commercial recreation	H									S	P	P	P	P	P	

Use Types	Impact Rating	AG	RR	R-1	R-2	R-3	R-4	RM	UC	C-1	C-2	CBD	BP	I-1	I-2	Supplemental Regulations
(controlled-impact)*																
Commercial recreation (high-impact)*	H	S									P		S	P	P	
Communication service*	M					S			P	S	P	P	P	P	P	
Construction sales/service*	H										P	S	P	P	P	§ 410-31.5
Consumer service*	M								P	P	P	P	P	P	P	
Convenience storage*	H						S					P	P	P	P	§ 410-31.5
Food sales (convenience)*	H								S	P	P	P	S	P	S	
Food sales (limited)*	L								P	P	P	P	S			
Food sales (general)*	M								S	P	P	P	S	P		
Food sales (supermarkets)*	I									S	P	S				
Funeral service*	M				S	S	P		P	P	P	P	P	P	P	
Gaming facilities*	H									S	P	P		P	P	
Kennels*	M	S	S								S			P	P	§ 410-31.5
Laundry services*	H										P	P	P	P	P	
Liquor sales*	H									S	P	P		P		
Lodging*	H								S	S	P	P	P			
Personal improvement	M						S		P	P	P	P	P	P	P	
Personal services*	M						S		P	P	P	P	P	P	P	
Pet services*	M								P	P	P	P	P	P		
Research services*	M								S	S	P	P	P	P	P	
Restaurants (drive-through or fast-food)*	H								S	S	S	S	S	S	S	
Restaurants (general)*	H								P	P	P	P	P	P	P	
Restricted business*	I										S			P	P	§ 410-31.5
Retail services (limited)	M								P	P	P	P	P			
Retail services (medium)	M								P	P	P	P	P			
Retail services (large)*	H								S	S	S	S				
Retail services (mass)*	I									S	S					

Use Types	Impact Rating	AG	RR	R-1	R-2	R-3	R-4	RM	UC	C-1	C-2	CBD	BP	I-1	I-2	Supplemental Regulations
Stables*	M	P	S													
Surplus sales*	I										P		P	P	P	
Trade services*	M								S	S	P	S	P	P	P	
Travel centers	H									S	P		S	P	P	§ 410-31.5
Truck stops	I										S		S	S	P	§ 410-31.5
Veterinary services (general)*	M	S	S						P	P	P	P	P	P	P	
Veterinary services (large animal)	H	S												P	P	
Parking Uses																
Off-street parking*	H								S		P	S		P	P	
Parking structure*	H									S	P	P	P	P	P	
Transportation Uses																
Aviation (general)*	I	S											S	S	P	
Aviation (private)*	M	S	S											S	S	
Railroad facilities*	I											S	S	P	P	
Truck terminal*	H													S	P	
Transportation terminal*	H									S	P	P	P	P	P	
Industrial Uses																
Agricultural industry*	I	S												S	P	
Construction yards*	H													P	P	
Custom manufacturing	M								S	S	P	P	P	P	P	
Data Center*	M									S	S			S	S	§ 410-31.6
Light industry*	M												S	P	P	
General industry*	H													P	P	
Heavy industry*	I														S	
Recycling collection*	M									S	P	S	S	P	P	
Recycling processing*	H										S			P	P	
Resource extraction*	I	S													S	§ 410-31.6
Salvage services*	I	S													S	§ 410-31.6

Use Types	Impact Rating	AG	RR	R-1	R-2	R-3	R-4	RM	UC	C-1	C-2	CBD	BP	I-1	I-2	Supplemental Regulations
Vehicle storage*	H													S	S	§ 410-31.6
Warehousing (enclosed)*	M	S									S	S	P	P	P	
Warehousing (open)*	H													S	P	
Miscellaneous Uses																
Amateur radio tower	L	P	P	P	P	P	P	P	P	P	P	S	P	P	P	
Communications tower	M	S	S						S		S	S	P	P	P	
Construction batch plant*	H													S	P	
Landfill (nonputrescrible)*	H	S													S	§ 410-31.9
Landfill (putrescible)*	I															§ 410-31.9
WECS	L	P	S	S	S	S	S	S	S	S	S	S	P	P	P	§ 410-31.9
Shipping containers	H	P									S		S	P	P	§ 410-31.13

2. Public Hearing - 7:00 PM - Class C Liquor License Application for Straight Path LLC, dba Red Path Gallery & Tasting Room, 514 Seward Street - City Clerk Bargmann

Nebraska Liquor Control

301 Centennial Mall South - 1st Floor PO Box 95046 Lincoln NE 68508

Application Copy

File Number: 151896

LICENSE TYPE Class C Beer, Wine, Spirits On and Off Sale	APPLICATION DATE RECEIVED 2026-02-18
SECONDARY LICENSE(S) None selected	
LICENSEE LEGAL NAME Straight Path LLC	LICENSEE TYPE Corporation
DOING BUSINESS AS Red Path Gallery & Tasting Room	CORPORATE NUMBER 2601032605
INCORPORATION DATE	
CORRESPONDENCE ADDRESS 514 Seward Street	
MAILING ADDRESS 514 Seward Street	
PHYSICAL ADDRESS 514 Seward Street	
CONTACT NAME Jeffrey Owusu-Ansah	PREFERRED CONTACT METHOD Email
CONTACT PHONE (402) 473-4388	ALTERNATE PHONE
FAX	EMAIL jowusuansah@remboltlawfirm.com

CORPORATE STRUCTURE

NAME	POSITION/TITLE	PARENT COMPANY	% INTEREST
Amber M. Fiala	President		50
David J. Fiala	Member		50

ADDITIONAL INFORMATION

Temporary Operating Permit

LICENSE

License 121948 (Active) - Class C Beer, Wine, Spirits On and Off Sale (Nov 01, 2025 - Oct 31, 2026)
Red Path Gallery & Tasting Room (KRISTINA CHRISTOPHER LLC)

MARITAL STATUS Single	
MANAGED BY AGENT No	
PREMISES TYPE Bar/Lounge (on prem)	PREMISES NAME Red Path Gallery & Tasting Room
OPERATOR Amber M. Fiala	CORPORATE LIMIT DESIGNATION Inside
LEASE OR OWN Lease	EXPIRATION DATE 2028-02-29
PHYSICAL ADDRESS 514 Seward St, Seward, NE 68434	
MAILING ADDRESS	
CONTACT NAME Jeffrey Akwasi Owusu-Ansah	PREFERRED CONTACT METHOD Email

CONTACT PHONE	ALTERNATE PHONE
(402) 473-4388	(402) 475-5100
FAX	EMAIL
	jowusuansah@remboltlawfirm.com
PREMISES MANAGER	PREMISES MANAGER EMAIL
Amber M. Fiala	afiala136@gmail.com

QUESTIONS

Class C Beer, Wine, Spirits On a

1. READ CAREFULLY. ANSWER COMPLETELY AND ACCURATELY

   Has any officer, member, owner, or manager named in this application; or their spouse, EVER been convicted of or plead guilty to any charge?

   *The Commission must be notified of any arrests and/or convictions that may occur after the date of this application.

   No

2. What are the building dimensions: Enter length and width in feet separated by a comma (i.e. L20, W15) *Not square feet*
   A simple sketch of the area to be licensed will be required to be uploaded in the Documents Section.. Include the length x width, direction of NORTH and number of floors of the building. (NO BLUEPRINTS)

   L100, 20W

3. Is there an outdoor area?
   *Permanent fence or barrier is required for outdoor areas. Please contact the local governing body for other requirements regarding fencing.

   No

4. Will a basement be used for alcoholic storage or sale?

   No

5. How many floors of the building? (excluding basement) Please indicate which floors will be included in the liquor license.

   1

6. Is premises to be licensed within 150 feet of a church, school, hospital, home for indigent persons or for veterans, their wives, and children?

   No

7. Is premises to be licensed within 300 feet of a college campus or university?

   No

8. Are you acquiring any alcohol prior to obtaining this liquor license? If you are purchasing a business with a current license; this includes alcohol purchased as part of a business purchase agreement.

   Yes
   (document uploaded)

9. What date do you intend to open for business?

   March 6, 2026

10 What are the anticipated hours of operation?

   Thursday 10am-6pm
   Friday 12pm-6pm
   Saturday 10am-6pm
   Sunday 1pm-5pm

11 Are you borrowing any money from any source, including family or friends, to establish and/or operate the business?

   Yes
   Jones Bank

12 Will any person or entity, other than the applicant, be entitled to a share of the profits of this business?

   No

13 Is anyone listed on this application a law enforcement officer?

   No

14 What is the primary bank and/or financial institution to be utilized by the business AND list the individual(s) who are authorized to write checks and/or withdrawals on accounts at this institution.

Jones Bank

15 Do you have prior experience or training in selling, serving or managing alcohol sales?

Yes
Amber

16 Are all individuals named in this application as a part of the ownership and/or manager over 21 years of age?

Yes

17 Do you intend to sell cocktails to go as allowed under Neb Rev. Statute 53-123.04(4)?

Yes

18 Do you intend to allow drive through services (curb side pick up) allowed under Neb Rev. Statute 53-178.01(2)

No

19 List all past and present liquor licenses held in Nebraska or any other state by any person named in this application. List the license holder name, location of license, and license number (if available). Also list reason for termination of license(s) previously held.

None

20 Has the premises location been previously licensed within the last 2 years?

Yes

21 Are you applying for a Temporary Operating Permit?

Yes
(document uploaded)

22 Is the lease or deed for the premises listed under the applicant's name (LLC, Corporation, or Individual)? If the property is owned personally but the application is under an LLC or Corporation, a lease agreement must be made between the owner and the entity applying for the license.

Yes

23 If applying as a LLC or Corporation; is your LLC or Corporation active with the Nebraska Secretary of State? (Please mark yes if applying as an individual or partnership)

Yes

24 Per Nebraska Revised Statute 53-103.18 - Manager, defined: Manager means a person appointed by a corporation or limited liability company to oversee the daily operation of the business licensed in Nebraska. A manager shall meet all the requirements of the Nebraska Liquor Control Act as though he or she were the applicant, including residency.

What is the premises manager's name?

Amber Fiala

25 What is the manager's address?

411 N. Columbia Ave.
Seward, NE 68434
Seward County

26 What is the manager's phone number?

314-440-7979

27 What county is the manager registered to vote in?

The manager must be a resident of the state of Nebraska. If the manager is not registered to vote they can complete their voter registration here - https://www.nebraska.gov/apps-sos-voter-registration/

Seward County

28 What is the manager's email address? An email will be sent to them to obtain their personal information.

29 Is the manager married?

Yes
David Fiala

DOCUMENTS

TYPE	FILE NAME	DESCRIPTION
Temporary Operating Permit (TOP)	Application for Temporary Operating Permit - Straight Path.pdf	With the alcohol inventory
Lease / Deed / Purchase Agreement	Rental Agreement.pdf	
Premises Description & Diagram	Premises Diagram - Red Path Gallery & Tasting Room 4932-7922-0112 v.1.pdf	
Privacy Act Statement	Amber Fiala - Privacy Act Statement.pdf	Amber F.
Business Plan	Red Path Gallery - Business Plan.pdf	
Privacy Act Statement	Dave Fiala - Privacy Act Statement.pdf	
Alcohol Inventory	Alcohol Inventory - Red Path.pdf	

APPLICANT

Jeffrey Owusu-Ansah

DECLARATION

☑ I (We) the applicant(s) agree and consent

By checking the box next to "I (We) the applicant(s) agree and consent", the applicant(s) hereby consent(s) to an investigation of background and release present and future records of every kind and description including, but not limited to, police records, tax records, bank or lending institution records, and corporate records. I consent to the release of any documents supporting any declarations made in this application and agree to provide any documents supporting these declarations to the Nebraska Liquor Control Commission (NLCC) or the Nebraska State Patrol (NSP) immediately upon demand. I agree to provide any record needed in furtherance of any investigation related to this application immediately upon demand to the NLCC or the NSP. I waive any right or cause of action that I may have against the NLCC, the NSP, or any other individual or entity disclosing or releasing any investigatory or supporting records related to this application or the review of this application.

I acknowledge that false information submitted in this application is grounds for denial of a license. Any license issued based on the information submitted in this application is subject to additional conditions, cancellation, revocation, or suspension if the information contained herein is incomplete, inaccurate, or fraudulent. I acknowledge that any changes to the information contained in this application must be reported to the NLCC. I acknowledge the review of this application will involve a criminal record check of all owners, partners, managers, officers and stockholders or members owning 25% interest in the applying entity and their spouses. Any license granted by the NLCC is subject to the provisions of the Nebraska Liquor Control Act and the Rules & Regulations of the NLCC, and that failure to comply with these provisions and rules may subject the license to suspension, cancellations, or revocation. I acknowledge that a licensee must keep complete, accurate, and separate records and that a licensee's records and books are subject to inspection by the NLCC. NLCC auditors and law enforcement officers are authorized to enter and inspect the licensed premises at any time to determine whether any provision of the Act, rule or regulation, or ordinance has been or is being violated. I acknowledge that it is the licensee's responsibility to comply with the provisions of the Nebraska Liquor Control Act and the Commission's rules and regulations.

If I am an individual applicant, I will supervise in person the management and operation of the business and operate the business authorized by the license for myself and not as an agency for any other person or entity. If I am a corporate applicant, I will ensure that an approved manager will supervise in person the management and operation of the business. If I am a partnership applicant, I will ensure one partner supervises the management and operation of the business.

I will operate the licensed business in compliance with all applicable laws, rules and regulations, and ordinances and to cooperate fully with any authorized agent of the NLCC.

I declare under penalty of perjury that I have read the contents of this application and, to the best of my knowledge, believe all statements made in this application are true, correct, and complete.

Applicant Notification and Record Challenge: An applicant's fingerprints will be used to check the criminal history records of the FBI. The applicant may complete or challenge the accuracy of the information contained in the FBI Identification Record. The procedures for obtaining a change, correction, or updating an FBI identification record are set forth in 28 CFR 16.34.

Nebraska Liquor Control

301 Centennial Mall
South - 1st Floor PO
Box 95046 Lincoln
NE 68508

Additional Information Requested

File Number: 151896

LICENSE TYPE	ADDITIONAL INFORMATION DATE RECEIVED
Class C Beer, Wine, Spirits On and Off Sale	2026-02-24

SECONDARY LICENSE(S)
None selected

LICENSEE LEGAL NAME	LICENSEE TYPE
Straight Path LLC	Corporation
DOING BUSINESS AS	**CORPORATE NUMBER**
Red Path Gallery & Tasting Room	2601032605
INCORPORATION DATE	

CORRESPONDENCE ADDRESS
514 Seward Street
MAILING ADDRESS
514 Seward Street
PHYSICAL ADDRESS
514 Seward Street

CONTACT NAME	PREFERRED CONTACT METHOD
Jeffrey Owusu-Ansah	Email
CONTACT PHONE	**ALTERNATE PHONE**
(402) 473-4388	

FAX	EMAIL

CORPORATE STRUCTURE

NAME	POSITION/TITLE	PARENT COMPANY	% INTEREST
Amber M. Fiala	President		50
David J. Fiala	Member		50

ADDITIONAL INFORMATION

Temporary Operating Permit

LICENSE

License 121948 (Active) - Class C Beer, Wine, Spirits On and Off Sale (Nov 01, 2025 - Oct 31, 2026)
Red Path Gallery & Tasting Room (KRISTINA CHRISTOPHER LLC)

ADDITIONAL INFORMATION REQUESTED

1) Confirm that you only want the main floor on the license, previous license covered the entire 2 floors and basement. (answer in comment box)
2) Who are authorized to use the bank account?
3) Please include the plans for general management of the liquor on the business plan (training, keeping alcohol from minors, etc).

Thank you,
Corrinne Andersen – Licensing - (402) 471-2896 – corrinne.andersen@nebraska.gov

ADDITIONAL INFORMATION PROVIDED

1) Confirm that you only want the main floor on the license, previous license covered the entire 2 floors and basement. (answer in comment box)

We would like to add the basement. Under our link, we do not have access to the second floor.

2) Who are authorized to use the bank account?
Amber Fiala and David Fiala

DOCUMENTS

TYPE	FILE NAME	DESCRIPTION
Business Plan	Red Path Gallery - Business Plan 4916-5644-6354 v.1.pdf	Updated business plan.

APPLICANT

Jeffrey Owusu-Ansah

Premises Diagram – Red Path Gallery & Tasting Room

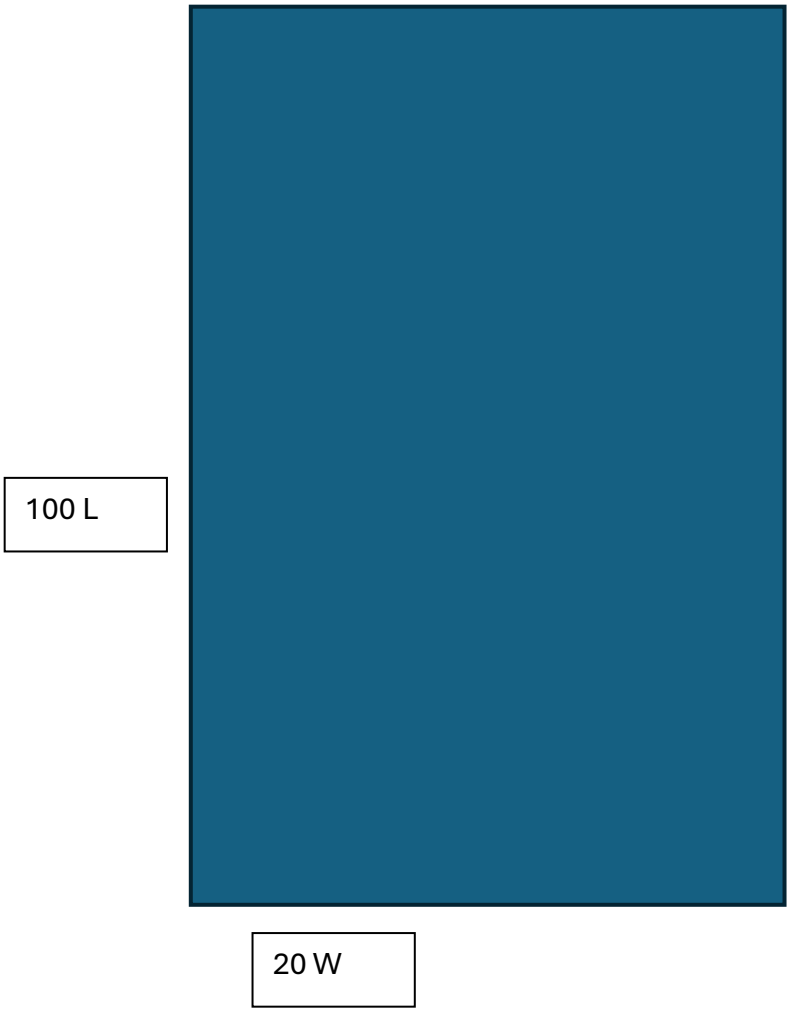

4932-7922-0112, v. 1

RENTAL AGREEMENT

THIS AGREEMENT made this 1st Day of March, 2026, by and between *Alison and Chase Koch with Kristina Christopher LLC*, herein called "Landlord," and *Amber & Dave Fiala* with Straight Path LLC, herein called "Tenant." Landlord hereby agrees to rent to Tenant the dwelling located at *514 Seward Street, Seward, NE* under the following terms and conditions.

1. **FIXED-TERM AGREEMENT (LEASE):**
   Tenants agree to lease this dwelling for a fixed term of *2 years*, beginning 03/01/2026 and ending 02/29/2028. Upon expiration, this Agreement shall become a month-to-month agreement AUTOMATICALLY, UNLESS either Tenants or Owners notify the other party in writing at least 30 days prior to expiration that they do not wish this Agreement to continue on any basis.
2. **RENT:**
   Tenant agrees to pay Landlord as base rent the sum of $2,000 - per month, due and payable monthly in advance on the 10th day of each month during the term of this agreement. A rate increase after the fixed term will be agreed upon by both parties.
3. **FORM OF PAYMENT:**
   Tenants agree to pay their rent in the form of an ACH automatic payment made out to the Landlord or by Check.
4. **SECURITY DEPOSIT:**
   Tenants hereby agree to pay a security deposit of $0 to be refunded upon vacating, returning the keys to the Landlord and termination of this contract according to other terms herein agreed. This deposit will be held to cover any possible damage to the property. No interest will be paid on this money and in no case will it be applied to back or future rent. It will be held intact by Landlord until at least thirty (30) working days after Tenants have vacated the property. At that time Landlord will inspect the premises thoroughly and assess any damages and/or needed repairs. This deposit money minus any necessary charges for missing/dead light bulbs, repairs, cleaning, etc., will then be returned to Tenant with a written explanation of deductions, within 60 days after they have vacated the property. – *security deposit waived for this lease*
5. **CLEANING FEE**
   Tenant hereby agrees to accept property in its present state of cleanliness. They agree to return the property in the same condition or pay a $200.00 minimum cleaning fee if the Landlord must have the property professionally cleaned.
6. **REMOVAL OF LANDLORD'S PROPERTY:**
   If anyone removes any property belonging to Landlord without the express written consent of the Landlord, this will constitute abandonment and surrender of the premises by Tenant and termination by them of this Rental Agreement. Landlord may also take further legal action.
7. **TENANT INSURANCE:**
   Landlord will not be liable for any loss of Tenant's property. Tenant hereby acknowledges this and agrees to make no such claims for any losses or damages against Landlord, his agents, or employees. Tenants agree to purchase insurance – at their own expense – sufficient to protect themselves and their property from fire, theft, burglary, breakage, electrical connections. They acknowledge that if they fail to procure such insurance, it is their responsibility and they alone shall bear the consequences.
8. **OCCUPANTS:**
   The number of occupants is limited to one (1) primary tenant. The property will be used only during normal business hours and no overnight stays. No subleasing is allowed by the Landlord.
9. **LOCK POLICY:**
   No additional locks will be installed on any door without the written permission of Landlord. Landlord will be given duplicate keys for all locks so installed at tenants' expense, before they are installed. One key will be supplied for current lock and custom code provided for keypad.

10. **LOCKOUTS:**

Should tenants lock themselves out of their studios and be unable to gain access through their own resources, they may call upon professional locksmith or the Owners to let them in. In either case, they are responsible for payment of the charges and/or damages involved. Owners charge a fee of $25 for providing this service. This fee is due and payable when the service is provided.

11. **INVENTORY AND INSPECTION RECORD:**
An inventory and inspection Record has been provided for the Tenants' use. Only after this has been filled out (within the 3-day time limit) will the Landlord take any action to complete necessary repairs. Landlord warrants that all major systems will be functional and in good repair at the time of possession. Light switches, wall plugs, doors, windows, faucets, drains, locks, toilets, sinks, etc. will either be in working order or will be repaired once the Tenants have completed the Inspection and Inventory Record. Tenants are encouraged to report any necessary repairs, no matter how slight, in writing, but they are advised that Landlord does not normally repair or replace nonfunctional items such as paint, carpets, etc., every time a property changes possession. Those items are scheduled for repair/replacement at regular intervals regardless of tenant turnover.

12. **TENANT RESPONSIBILITY:**
Good housekeeping is expected of everyone. Tenant agrees to keep quarters clean and in a sanitary condition. The Tenant agrees not to permit any deterioration or destruction to occur while they are occupying the property.

13. **ALTERATIONS:**
Tenant shall make no alterations, decorations, additions, or improvements in or to the premises without Landlords' prior written consent, and then only by contractors or mechanics, or other approved by Landlord. All alterations, additions, or improvements upon the premises, made by either party, shall become the property of the Landlord and shall remain upon, and be surrendered with said premises, as a part thereof, at the end of the term hereof.
They acknowledge that they will be responsible for and pay any damage done by rain, wind, hail, tornadoes, etc., if this damage is caused by leaving windows open, allowing stoppage and/or overflow or water and/or sewage pipes, broken windows or doors, torn screens, broken door and window locks, etc. or any damage caused while Tenant has occupancy.

14. **VEHICLES & Parking**
Tenants agree to use the Walk a Block rule for parking. The owner and all employees are encouraged to park at least a block away from the building. This allows patrons of the businesses parking availability. The Tenant will encourage all teachers of the studios to park at least one block away as well. Businesses and Retailers on the 500 block ask for your cooperation in this matter.

15. **UTILITIES:**
Tenant will be responsible for payment of all utilities to the City of Seward by providing a payment in the amount needed to the City each month, the check needs to be payable to the City of Seward.

16. **SERVICES**. Landlord shall be responsible for the following services in connection with the loft studios:
Internet Service
Garbage & Recycling Service

17. **NOTIFICATION OF SERIOUS BUILDING PROBLEMS:**
Tenant agrees to notify Landlord immediately if roof leaks, water spots appear on ceiling, or at the first sign of termite activity. Tenants also agree to notify the Owners immediately upon first discovering any signs of serious building problems such as foundation cracks, a tilting porch, a crack in plaster, buckling drywall or siding, a spongy floor, a leaky water heater, etc. If the tenant does not notify landlord in a prompt matter the tenant may be held financially responsible.

18. **REASONABLE TIME FOR REPAIRS:**
Upon being notified by Tenants that there is some building defect in which is hazardous to health, life, or safety, Owners shall undertake repairs as soon as possible. Should there be a delay of more than seventy-two (72) hours in making repairs, due to difficulty in scheduling the work or obtaining parts or for any other reason beyond the Owners' control, Owners agree to keep Tenants informed about the progress of work.

19. **NON-LIABILITY:**
The Tenants hereby state that work or repairs that need to be done will be handled by competent professionals, unless Tenants are qualified and capable of doing the work themselves and doing it properly, in a safe manner that meets all federal, state, and local regulations and have written approval from the landlord. Tenants further state that they will be legally responsible for any mishap they either do themselves or hire others to do. Landlord will be held free from harm and liability along with his agents and representatives. In the event that needed repairs are beyond the Tenants' capacity, they are urged to arrange for professional help.

20. **ACCESS TO PREMISES:**
The Owner reserves the right to enter the studios at reasonable times to inspect, make necessary repairs, supply services, or show it to prospective residents, purchasers, workmen, or contractors.

21. **SUBLETTING & ASSIGNMENT:**
Tenants shall not sublet the entire premises or any part of the premises, nor shall they assign this Agreement to anyone else without first obtaining Landlords' written permission. Prospective sublessees or assignees must submit an application to the Landlord and must agree to credit, background, reference, and employment verification as well as the obligation to pay a non-refundable $25 application fee. Permission to sublease will be determined by the sole discretion of the Landlord.

22. **PETS: No pets are allowed**

23. **TERMINATION UPON SALE OF PREMISES**. Notwithstanding any other provision of this Lease, Landlord may terminate this lease upon 45 days written notice to Tenant that the Premises have been sold.

24. **WAIVER:**
All rights given to Landlord by this agreement shall be cumulative in addition to any laws which exist or might come into being. Any exercise of any rights by Landlord or failure to exercise rights shall not act as waiver of those or any other rights. No statement or promise by Landlord, its agents, or employees, as to tenancy, repairs, amount of rent to be paid, or other terms and conditions shall be binding unless it is put in writing and made a specific part of this agreement.

25. **FULL DISCLOSURE:**
The Tenants signing this Rental Contract hereby state that all questions about this Rental Agreement have been answered, that they fully understand all the provisions of the agreement and the obligations and responsibilities of each party, as spelled out herein. They further state that they agree to fulfill their obligations in every respect or suffer the full legal and financial consequences of their actions or lack of action in violation of this agreement. Signature by the Tenant on this Rental Agreement is acknowledgement and he/she has received a signed copy of the Rental Agreement.

Accepted this 5th day of February, 2026

Tenant Date 2-5-26

2-5-26

Landlord-Manager Date 2-5-26

Nebraska Secretary of State

STRAIGHT PATH LLC

Thu Feb 19 08:21:29 2026

SOS Account Number
2601032605
Status
Active

Principal Office Address
No address on file
Registered Agent and Office Address
REMBOLT LUDTKE LLP
1128 LINCOLN MALL
SUITE 300
LINCOLN, NE 68508
Designated Office Address
514 SEWARD STRRET
SEWARD, NE 68434

Nature of Business
Not Available
Entity Type
Domestic LLC
Qualifying State: NE
Date Filed
Jan 30 2026

Next Report Due Date
Jan 01 2027

Associated Entities

Account Number	Name	Type	Status
2602037820	RED PATH	Trade Name	Active

Filed Documents

Filed documents for STRAIGHT PATH LLC may be available for purchase and downloading by selecting the Purchase Now button. Your Nebraska.gov account will be charged the indicated amount for each item you view. If no Purchase Now button appears, please contact Secretary of State's office to request document(s).

Document	Date Filed	Price	
Certificate of Organization	Jan 30 2026	$0.45 = 1 page(s) @ $0.45 per page	Purchase Now

Good Standing Documents

- If you need your Certificate of Good Standing Apostilled or Authenticated for use in another country, you must contact the Nebraska Secretary of State's office directly for information and instructions. Documents obtained from this site cannot be Apostilled or Authenticated.

Online Certificate of Good Standing with Electronic Validation

$6.50

This certificate is available for immediate viewing/printing from your desktop. A Verification ID is provided on the certificate to validate authenticity online at the Secretary of State's website.

Purchase Now

Certificate of Good Standing - USPS Mail Delivery

$10.00

This is a paper certificate mailed to you from the Secretary of State's office within 2-3 business days.

Continue to Order

Back to Top

A. Consideration of a Resolution Recommending Approval of a Class C Liquor License for Straight Path LLC

RESOLUTION NO. 2026-8

BE IT RESOLVED by the Mayor and Council of the City of Seward, Nebraska, that,

WHEREAS, Notice of Application for a Class C Liquor License for Straight Path, LLC, dba Red Path Gallery & Tasting Room, 514 Seward Street, Seward, Nebraska was published in the Seward County Independent on March 4th and 11th, 2026; and,

WHEREAS, a public hearing was held before the Mayor and Council of the City of Seward on March 17, 2026;

WHEREAS, no written protests were filed with the City, and no oral objections were heard by the Mayor and Council,

NOW, THEREFORE, BE IT RESOLVED by the Mayor and Council of the City of Seward, Nebraska, that recommendation be made to the Nebraska Liquor Control Commission that a Class C Liquor License for Straight Path, LLC, dba Red Path Gallery & Tasting Room, 514 Seward Street, Seward, Nebraska be approved.

The Mayor declared the resolution adopted.

Dated: March 17, 2026

THE CITY OF SEWARD, NEBRASKA

_____
Joshua Eickmeier, Mayor

ATTEST:

_____
Derek Bargmann, City Clerk

(SEAL)

B. Consideration of a Request to Recommend Amber Fiala as Manager of Class C Liquor License for Straight Path LLC

City of Seward
Police Department
Chief Brian W. Peters
148 South 1st Street
Seward, NE 68434
Ph: 402-643-6164 Fax: 402-643-6785

March 11, 2026

Derek Bargmann
City Clerk
City of Seward, Nebraska

RE: Liquor License Application – Red Path Gallery & Tasking Room (514 Seward St.)

Derek,

There are no pertinent contacts on record with the Seward Police Department regarding the new owners, Amber M. and David J. Fiala. Therefore, we recommend issuing the liquor license.

Feel free to contact me if you have any questions.

Regards,

Brian W. Peters

Brian W. Peters
Chief of Police

ADMINISTRATIVE ITEMS

1. Consideration of a Resolution to Update Policy for the Burn Site - City Administrator Butcher

RESOLUTION NO. 2026-9

WHEREAS, the City Council may by resolution fix the hours of opening and closing of the Seward Municipal Burnpile and former dumping grounds located approximately one mile south and one-half mile east of the City of Seward, Nebraska, and

WHEREAS, it is necessary to restrict and limit the materials to be deposited at such landfill to be wood, brush, and storm ~~grass, leaves, and related yard and garden~~ debris only and provide for a time that the same is open to the residents of the City of Seward, Nebraska for access thereto and for the issuance of permits and fees for the use thereof for the purposes of this resolution.

NOW THEREFORE, BE IT RESOLVED BY THE MAYOR AND COUNCIL OF THE CITY OF SEWARD, NEBRASKA that:

1. The City of Seward's Municipal Burnpile and former dumping grounds shall be used for the deposit and dumping and as a burn site for brush, wood pallets, logs, trees under 8-foot lengths and untreated lumber. Plywood, particle board, painted lumber, treated lumber, household furniture, cardboard, household garbage, railroad ties, telephone poles, fence posts, dirt, stumps, paint, chemicals, batteries, and tires shall not be accepted at the site; this limitation being by order of the Nebraska Department of Water, Energy and Environment ~~and Energy~~. Grass, leaves, and related yard and garden debris will no longer be allowed on site. ~~shall be deposited and dumped at a separate specially designated location at the burnpile site and not co-mingled with the wood products~~.

2. Said burnpile site and grounds shall be open for allowed items only to residents of the City of Seward on Saturdays of each week from April – October at hours to be established. ~~except i~~In the winter months (November-March) it will be accessible on select Saturdays which will be set up and posted on a yearly basis. If used during this specified time limit, no fee shall be charged, nor permit required.

3. Access to use of the site on an irregular basis on Monday through Friday of each week for deposit of allowed items for a twenty-four (24) hour period may be obtained during regular City business days and hours, upon request at City and in payment of the following fees:

DAILY LEASE FEE	
Address within City Limits:	
Individual	$ 15.00
Businesses	$100.00
Address within Seward County:	
Individual	$ 30.00
Businesses	$100.00
Non-Resident Businesses	$100.00

4. Upon approval for access to the site on a regular basis, a key may be issued by the City Clerk's Office to residents and industries for deposit of approved wood products and approved lawn debris in payment of the following lease fee and completion of an application:

ANNUAL LEASE FEE	
Address within City Limits:	
Individual	$ 75.00
Businesses	$500.00
Address within Seward County:	
Resident	$150.00
Businesses	$500.00

Hours of access or other limitations and restrictions may be designated by the City Council as it may determine. In addition to the Annual Lease Fee, a seventy-five dollar ($75.00) deposit shall be made for the key issued, returnable to the permittee upon surrender of such key to the City.

5. No key leased shall be assigned or transferred by the lessee nor used for any other purpose than that provided for in this resolution. If any issued key is used in violation of this resolution, it shall be revoked and allowance of lessee to deposit any items shall cease upon written notice from the City Administrator.

Resolutions 26-12, 2023-3, and all previous resolutions in conflict with this resolution are hereby revoked.

The Mayor declared the resolution adopted.

Dated: March 17, 2026

THE CITY OF SEWARD, NEBRASKA

ATTEST:

_____
Joshua Eickmeier, Mayor

_____
Derek Bargmann, City Clerk

(SEAL)

A. Consideration to Issue Refund to 2026 Keyholders Who Wish to Return Due to Potential Changes in Policy

2. Approval to Advertise for Bids to Construct the Metering Manhole and Sampling Building Project on Walker Road - City Engineer Oneby

DOCUMENT 00 11 13

ADVERTISEMENT FOR BIDS

Metering Manhole & Sampling Building – Phase 1
Seward, Nebraska
SEH No. SEWAC 163917

Notice is hereby given that Sealed Bids will be received by the City Administrator until 2:00 p.m., Tuesday, April 14, 2026, at City Hall, located at 537 Main Street, Seward, NE 68434, at which time they will be publicly opened and read aloud, for the furnishing of all labor and material for the construction of Metering Manhole & Sampling Building – Phase 1.

Major components of the Work include: Sanitary sewer piping, installation of owner-furnished manholes, cast-in-place building foundation and equipment pads, electrical conduit and miscellaneous site work.

The Bidding Documents may be seen at the Issuing Office of SEH located at 2351 Connecticut Avenue, Suite 300, Sartell, MN 56377-2485, 320.229.4300, Colin Marcusen,, PE, 320.229.4359, cmarcusen@sehinc.com.

The Bidding Documents may be viewed for no cost at http://www.sehinc.com by selecting the Project Bid Information link at the bottom of the page and the View Plans option from the menu at the top of the selected project page.

Digital image copies of the Bidding Documents are available at http://www.sehinc.com for a fee of $30. These documents may be downloaded by selecting this project from the "Project Bid Information" link and by entering eBidDoc™ Number 10108765 on the SEARCH PROJECTS page. For assistance and free membership registration, contact QuestCDN at 952.233.1632 or info@questcdn.com.

Paper Bids shall be on the form provided for that purpose and according to the Bidding Documents prepared by SEH dated March 20, 2026.

Bid security in the amount of 5 percent of the Bid must accompany each Bid in accordance with the Instructions to Bidders.

Bids shall be directed to the City Administrator, securely sealed and endorsed upon the outside wrapper, "BID FOR METERING MANHOLE & SAMPLING BUILDING – PHASE 1, SEWARD, NE, SEH NO. SEWAC 163917."

The Owner reserves the right to reject any and all Bids, to waive irregularities and informalities therein and to award the Contract in the best interests of the Owner.

Greg Butcher
City Administrator
Seward, NE

Publish:

QuestCDN:	March 25, 2026
Seward County Independent:	March 25, April 1, and April 8, 2026

CITY OF
SEWARD, NEBRASKA

CONSTRUCTION PLANS FOR

METERING MANHOLE AND SAMPLING BUILDING

SHEET INDEX

SHEET NO.	DESCRIPTION
G001	TITLE SHEET
GA001	GENERAL INFORMATION AND ABBREVIATIONS
C101	PLAN AND PROFILE
C102	GRADING AND PAVEMENT LAYOUT
C501	FLUME AND SAMPLING MANHOLE DETAILS
C502	DETAILS
C503	DETAILS
S001	GENERAL STRUCTURAL ABBREVIATIONS, SYMBOLS AND TABLES
S002	GENERAL STRUCTURAL NOTES
S101	FOUNDATION AND LEVEL 1 PLANS
S501	CONCRETE DETAILS
A001	CODE PLAN AND INFORMATION
A101	FLOOR AND ROOF PLANS, SCHEDULES, DETAILS
A201	EXTERIOR ELEVATIONS, SECTIONS
A501	CONSTRUCTION DETAILS
P001	GENERAL PROCESS INFORMATION
P101	SAMPLING BUILDING DETAILS
M001	MECHANICAL SYMBOLS AND ABBREVIATIONS
M101	GRADE LEVEL MECHANICAL PLAN
E001	ELECTRICAL SYMBOLS, ABBREVIATIONS AND NOTES
E101	ELECTRICAL - SITE PLAN
E301	ELECTRICAL PLAN
E501	ONE-LINE DIAGRAM
E801	ELECTRICAL DETAILS

LOCATION MAP

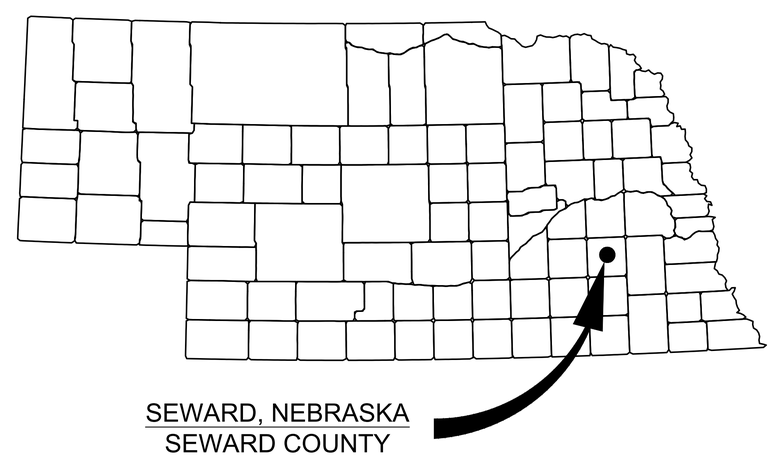

NEBRASKA

Know what's **below.**
Call before you dig.

SEH

NOT FOR CONSTRUCTION

Project Owner
SEWARD NEBRASKA

SEWARD, NEBRASKA
METERING MANHOLE AND SAMPLING BUILDING
2847-2886 WALKER ROAD
SEWARD, NE 68434

This drawing is an instrument of service and shall remain the property of Short Elliott Hendrickson, Inc. (SEH). This drawing, concepts and ideas contained herein shall not be used, reproduced, revised, or retained without the express written approval of SEH.

Submission or distribution of this drawing to meet official or regulatory requirements or for purposes in connection with the project is not be construed as publication in derogation of any of the rights of SEH.

COPYRIGHT © 2024
Short Elliott Hendrickson, Inc.
All Rights Reserved.

SEH Project	SEWAC 163917
Checked By	CRB
Drawn By	KKP

Project Status	**Issue Date**
CLIENT REVIEW	02/13/2026

REVISION SCHEDULE

REV. #	DESCRIPTION	DATE

TITLE SHEET

G001

Save: 1/27/2026 6:49 PM kpederson Plot: 2/12/2026 9:27 AM C:\Users\kpederson\DC\ACCDocs\SEH\SEH Seward WWTF\Project Files\Design\Civilcad\DWG\Industrial Park\SHEETS\SE163917TL.dwg

ABBREVIATIONS

(NOT ALL OCCUR IN PROJECT)

&	AND
∠	ANGLE
@	AT
℄	CENTERLINE
∅	DIAMETER/ROUND
(E)	EXISTING
#	POUND/NUMBER
+/-	PLUS OR MINUS
PL	PROPERTY LINE
SQ	SQUARE
A/C	AIR CONDITIONING
AB	ANCHOR BOLT
ABV	ABOVE
ACT	ACOUSTICAL CEILING TILE
ADD	ADDENDUM
ADJ	ADJUSTABLE
ADJA	ADJACENT
AFF	ABOVE FINISH FLOOR
AHU	AIR HANDLING UNIT
AL	ALUMINUM
ALUM	ALUMINUM
ALT	ALTER OR ALTERNATE
ANG	ANGLE
ANOD	ANODIZED
AP	ACCESS PANEL
APPROX	APPROXIMATE
ARCH	ARCHITECTURAL
ASPH	ASPHALT (PAVING)
BD	BOARD
BITUM	BITUMINOUS
BLDG	BUILDING
BLK	BLOCK
BLKG	BLOCKING
BM	BEAM
BOH	BACK OF HOUSE
BOT	BOTTOM
BR	BEDROOM
BRG	BEARING
BRKT	BRACKET
BTWN	BETWEEN
BUR	BUILT-UP ROOFING
CAB	CABINET
CB	CATCH BASIN
CF/CI	CONTRACTOR FURNISHED CONTRACTOR INSTALLED
CFM	CUBIC FEET PER MINUTE
CG	CORNER GUARD
CHAN	CHANNEL
CIP	CAST-IN-PLACE
CIRC	CIRCULATING
CJ	CONTROL JOINT
CLNG	CEILING
CLO	CLOSET
CLR	CLEAR
CM	CENTIMETER
CMU	CONCRETE MASONRY UNIT
CNTR	COUNTER
CO	CLEANOUT/CASED OPENING /CONCRETE OPENING
COL	COLUMN
COMM	COMMUNICATION
CONC	CONCRETE
CONN	CONNECTION
CONSTR	CONSTRUCTION
CONT	CONTINUOUS
CONTR	CONTRACTOR
COOR	COORDINATE
CORR	CORRIDOR
CP	CARPET
CR	CLOSET ROD
CT	CERAMIC TILE
CTR	CENTER
d	PENNY (NAILS)
D	DEEP/DEPTH/DRYER
DA	DOUBLE ACTING
DBL	DOUBLE
DEPT	DEPARTMENT
DET	DETAIL
DF	DRINKING FOUNTAIN
DIA	DIAMETER
DIAG	DIAGONAL
DIM	DIMENSION
DISP	DISPENSER
DN	DOWN
DO	DOOR OPENING
DR	DOOR
DS	DOWNSPOUT
DW	DISHWASHER
DWG	DRAWING
DWR	DRAWER
E	EAST
EA	EACH
EF	EXHAUST FAN
EIFS	EXTERIOR INSULATION & FINISH SYSTEM
EJ	EXPANSION JOINT
EL	ELEVATION
ELEC	ELECTRICAL
ELEV	ELEVATOR
EMER	EMERGENCY
ENCL	ENCLOSURE
EOS	EDGE OF SLAB
EP	ELECTRICAL PANEL
EQ	EQUAL
EQPT	EQUIPMENT
EW	EACH WAY
EWC	ELECTRICAL WATER COOLER
EXH	EXHAUST
EXP	EXPANSION
EXPO	EXPOSED
EXIST	EXISTING
EXT	EXTERIOR
F	FLUSH DOOR
FA	FIRE ALARM
FAB	FABRICATE
FAM	FLUID APPLIED MEMBRANE
FB	FLAT BAR
FCO	FLOOR CLEAN OUT
FD	FLOOR DRAIN
FE	FIRE EXTINGUISHER
FEC	FIRE EXTINGUISHER CABINET
FFE	FINISH FLOOR ELEVATION
FF&E	FURNITURE, FIXTURE & EQUIPMENT
FFS	FINISH FLOOR SEPARATION
FG	FULL GLASS DOOR
FHC	FIRE HOSE CABINET
FIN	FINISH
FIXT	FIXTURE
FLASH	FLASHING
FLDG	FOLDING
FLG	FLOORING
FLR	FLOOR
FND	FOUNDATION
FO	FACE OF ...
FOC	FACE OF CONCRETE
FOM	FACE OF MASONRY
FOS	FACE OF SLAB/ FACE OF STUD
FOW	FACE OF WALL
FR	FRAME
FRG	FIBER REINFORCED GYPSUM
FRP	FIBERGLASS REINFORCED PLASTIC
FRT	FIRE RETARDANT TREATED WOOD
FRZ	FREEZER
FS	FLOOR SINK/FULL SIZE
FT	FOOT/FEET
FTD	FACIAL TISSUE DISPENSER
FTG	FOOTING
FURR	FURRING/FURRED
FUT	FUTURE
G	GAS (PIPE)
GA	GAGE
GAL	GALLON
GALV	GALVANIZED
GB	GRAB BAR
GEN	GENERATOR
GFI	GROUND FAULT INTERCEPTOR
GFRC	GLASS FIBER REINFORCED CONCRETE
GL	GLASS
GLU-LAM	GLUED LAMINATED WOOD
GND	GROUND
GPH	GALLONS PER HOUR
GWB	GYPSUM WALL BOARD
GYP	GYPSUM
H	HEIGHT/HIGH
HB	HOSE BIB
HC	HOLLOW CORE
HCP	HANDICAPPED
HD	HEAD
HDWD	HARDWOOD
HDWR	HARDWARE
HG	HALF GLASS DOOR
HM	HOLLOW METAL
HORIZ	HORIZONTAL
HR	HOUR
HS	HAND SINK
HT	HEIGHT
HTR	HEATER
HVAC	HEATING, VENTILATION AND AIR CONDITIONING
ID	INSIDE DIAMETER (DIMENSION)
INCL	INCLUDED/INCLUSIVE/ INCLUDING
INSUL	INSULATION
INT	INTERIOR
INV	INVERT
JAN	JANITOR
JB	JUNCTION BOX
JST	JOIST
JT	JOINT
KD	KNOCK DOWN
KG	KILOGRAM
KIT	KITCHEN
KM	KILOMETER
KO	KNOCK-OUT
L	LENGTH/LONG
L	LOUVERED DOOR
LAB	LABORATORY
LAM	LAMINATE/LAMINATED
LAV	LAVATORY
LB	POUND
LF	LINEAL FOOT
LKR	LOCKER
LOC	LOCATION
LP	LAMINATED PLASTIC
LTG	LIGHTING
LVR	LOUVER
MAT'L	MATERIAL
MAX	MAXIMUM
MC	MEDICINE CABINET
MECH	MECHANICAL
MEMB	MEMBRANE
MTL	METAL
MFR	MANUFACTURER
MH	MANHOLE
MIN	MINIMUM
MIR	MIRROR
MISC	MISCELLANEOUS
MLDG	MOULDING
MM	MILLIMETER
MO	MASONRY OPENING
MOD	MODULAR
MR	MOISTURE RESISTANT
MTD	MOUNTED
MTG	MOUNTING
N	NORTH
NIC	NOT IN CONTRACT
NL	NIGHT LIGHT
NO	NUMBER
NOM	NOMINAL
NS	NO SCALE
NTS	NOT TO SCALE
OC	ON CENTER
OA	OVERALL
OD	OUTSIDE DIAMETER (DIMENSION)
OF/CI	OWNER FURNISHED/ CONTRACTOR INSTALLED
OFD	OVERFLOW DRAIN
OFF	OFFICE
OF/OI	OWNER FURNISHED/ OWNER INSTALLED
OPNG	OPENING
OPP	OPPOSITE
OPQ	OPAQUE
OPR	OPERABLE
OHS	OVERHEAD SECTIONAL DOOR
OHC	OVERHEAD COILING DOOR
PASS	PASSAGE
PC	PRECAST CONCRETE
PERIM	PERIMETER
PERP	PERPENDICULAR
PH	PENTHOUSE
PIP	POURED-IN-PLACE
PL	PLATE
PLAM	PLASTIC LAMINATE
PLAS	PLASTER
PLBG	PLUMBING
PLYWD	PLYWOOD
PNL	PANEL
PR	PAIR
PREFAB	PREFABRICATED
PREP	PREPARATION
PROP	PROPERTY
PSF	POUNDS PER SQUARE FOOT
PT	PAINT/POINT
PTD	PAPER TOWEL DISPENSER
PTDR	PAPER TOWEL DISPENSER & RECEPTACLE
PTN	PARTITION
PTR	PAPER TOWEL RECEPTACLE
PVC	POLY VINYL CHLORIDE
QT	QUARRY TILE
R	RISER
RAD	RADIUS
RB	RESILIENT BASE
RB HK	ROBE HOOK
RCP	REFLECTED CEILING PLAN
RD	ROOF DRAIN
REBAR	REINFORCING BAR
REF	REFERENCE/REFER
REFL	REFLECTOR
REFR	REFRIGERATOR
REINF	REINFORCED/REINFORCING
REQ	REQUIRED
RESIL	RESILIENT
REST	RESTROOM
REV	REVISED/REVISION
RF	RESILIENT FLOORING
RFG	ROOFING
RGTR	REGISTER
RLG	RAILING
RM	ROOM
RO	ROUGH OPENING
RWR	RECESSED WASTE RECEPTACLE
RWD	REDWOOD
RWL	RAIN WATER LEADER
S	SOUTH
SA	SINGLE ACTING
SC	SOLID CORE
SCHED	SCHEDULE
SCP	SCUPPER
SCR	SHOWER CURTAIN ROD
SCWD	SOLID CORE WOOD DOOR
SD	SMOKE DETECTOR
SECT	SECTION
SF	SQUARE FEET
SH	SHELF
SHR	SHOWER
SHT	SHEET
SHTG	SHEATHING
SIM	SIMILAR
SL	SLOPE
SLDG	SLIDING
SLNT	SEALANT
SM	SQUARE METER
SMH	SEWER MANHOLE
SND	SANITARY NAPKIN DISPENSER
SNR	SANITARY NAPKIN RECEPTACLE
SP	SOLID PLASTIC
SPEC	SPECIFICATIONS
SPKR	SPEAKER
SPRK	SPRINKLER
SQ	SQUARE
S SK	SERVICE SINK
S STL	STAINLESS STEEL
ST	STONE
STA	STATION
STD	STANDARD
STL	STEEL
STOR	STORAGE
STRUCT	STRUCTURE/STRUCTURAL
SURR	SURROUND
SUSP	SUSPEND/SUSPENDED
SVC	SERVICE
SW	SWITCH
SYM	SYMMETRICAL
SYS	SYSTEM
T	TREAD
T&G	TONGUE AND GROOVE
T/S	TUB/SHOWER
TACKBD	TACKBOARD
TB	TOWEL BAR
TD	TRENCH DRAIN
TEL	TELEPHONE
TEMP	TEMPERED/TEMPORARY
TER	TERRAZZO
TFMR	TRANSFORMER
THK	THICK/THICKNESS
THR	THRESHOLD
TLT	TOILET
TO	TOP OF ...
TOC	TOP OF CURB
TOF	TOP OF FLOOR
TOP	TOP OF PARAPET
	TOP OF PAVEMENT
TPD	TOILET PAPER DISPENSER
TPH	TOILET PAPER HOLDER
TOS	TOP OF STEEL
TRAN	TRANSITION
TRANS	TRANSPARENT
TS	TUBE STEEL
TSCD	TOILET SEAT COVER DISPENSER
TSH	TOWEL SHELF
TV	TELEVISION
TYP	TYPICAL
UC	UNDERCUT
UL	UNDERWRITERS LABORATORIES, INC.
UNF	UNFINISHED
UNO	UNLESS NOTED OTHERWISE
UR	URINAL
V	VISION GLASS DOOR
VAL	VALANCE
VAR	VARIES
VCT	VINYL COMPOSITION TILE
VERT	VERTICAL
VEST	VESTIBULE
VOL	VOLUME
VTR	VENT THROUGH ROOF
W	WEST/WIDTH/WIDE/WASHER
W/	WITH
W/O	WITHOUT
WC	WATER CLOSET
WD	WOOD
WDP	WOOD PANELING
WDW	WINDOW
WH	WATER HEATER
WO	WINDOW OPENING
WP	WATERPROOF
WPM	WATERPROOF MEMBRANE
WS	WOOD SCREWS
WR	WATER RESISTANT
WRB	WARDROBE
WSCT	WAINSCOT
WT	WEIGHT
WWF	WELDED WIRE FABRIC

MATERIAL SYMBOLS

(NOT ALL OCCUR IN PROJECT)

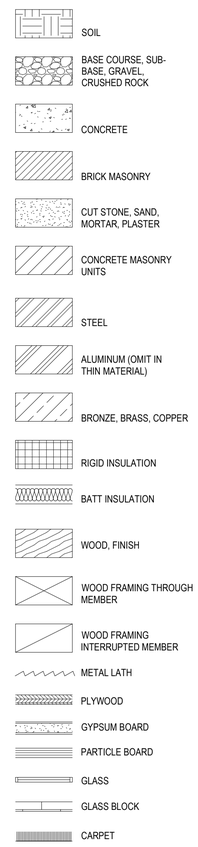

CALLOUT SYMBOLS

(NOT ALL OCCUR IN PROJECT)

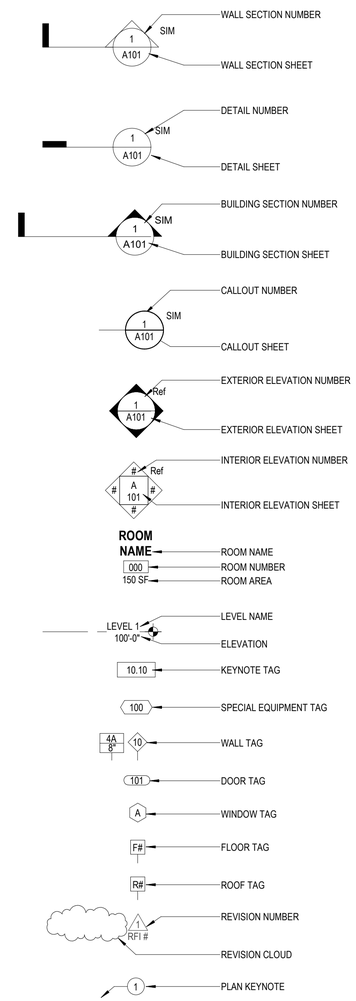

GENERAL NOTES

ARCHITECTURE GENERAL NOTES:

1. THESE DRAWINGS ARE LEGAL INSTRUMENTS OF SERVICE FOR THE USE OF THE OWNER AND ITS AUTHORIZED AGENTS AND VENDORS ON THE DESIGNATED PROJECT ONLY.
2. GC RESPONSIBLE FOR KNOWLEDGE OF RELATIVE INFORMATION CONTAINED IN THESE DOCUMENTS AND THE CONDITIONS UNDER WHICH THE WORK WILL BE PERFORMED.
3. CAREFULLY AND THOROUGHLY EXAMINE THE PROJECT SITE, FIELD VERIFY ALL CONDITIONS, GRADES, ELEVATIONS AND DIMENSIONS OF THE VARIOUS FEATURES OF THE SITE AND COMPARE DRAWINGS WITH THE EXISTING CONDITIONS. ANY DISCREPANCIES AND/OR CONDITIONS NEEDING CLARIFICATION SHALL BE REPORTED IN WRITING TO THE ARCHITECT BEFORE STARTING WORK.
4. ALL CONSTRUCTION, FABRICATION AND INSTALLATION SHALL CONFORM TO THE LATEST LOCALLY ADOPTED EDITIONS OF ANY FEDERAL, STATE AND LOCAL CODES, REGULATIONS, STANDARDS AND ORDINANCES OF GOVERNING AGENCIES HAVING JURISDICTION. SUCH APPLICABLE CODES, ETC. ARE THOSE WHICH ARE IN EFFECT AT THE TIME THE PROJECT PERMIT APPLICATION IS RECORDED.
5. ALL TRADES ARE CONSIDERED SPECIALISTS IN THEIR RESPECTIVE FIELD/TRADE AND SHALL, BEFORE SUBMISSION OF BID OR PERFORMANCE OF WORK, NOTIFY THE CONTRACTOR IN WRITING OF ANY WORK ON THE DRAWINGS OR IN THE SPECIFICATIONS WHICH CANNOT BE FULLY WARRANTED OR CONSTRUCTED AS DETAILED OR SPECIFIED. THE CONTRACTOR WILL NOTIFY THE ARCHITECT OF SUCH CONDITIONS IN WRITING.
6. DUE TO REPRODUCTION PROCESSES, DRAWINGS MAY NOT BE ACCURATE TO SCALE. ALL DIMENSIONS SHALL TAKE PRECEDENCE OVER SCALE SHOWN AND IN NO CASE SHALL WORKING DIMENSIONS BE SCALED FROM PLANS, SECTIONS, ELEVATIONS OR DETAILS.
7. THE PROCESS, CIVIL, STRUCTURAL, MECHANICAL, PLUMBING, AND ELECTRICAL DRAWINGS ARE SUPPLEMENTARY TO THE ARCHITECTURAL DRAWINGS. DISCREPANCIES BETWEEN THE VARIOUS DRAWINGS SHALL BE REPORTED BY THE CONTRACTOR TO THE ARCHITECT IN WRITING.
8. PRODUCTS AND MANUFACTURED ITEMS SHALL BE PROVIDED AS SPECIFIED. SUBSTITUTIONS WILL BE PERMITTED IN ACCORDANCE WITH THE PROCEDURES OUTLINED IN THE SPECIFICATIONS.
9. WHERE DETAILS ARE NOT SHOWN OR NOTED, GC IS TO PROVIDE A WRITTEN REQUEST FOR INFORMATION TO CLARIFY SPECIFIC DETAIL CONDITIONS.
10. ALL INDICATED EXISTING UTILITIES OR STRUCTURES ARE BASED ON INFORMATION OF RECORD. TAKE PRECAUTIONARY MEASURES TO PROTECT THE UTILITY LINES NOT OF RECORD OR NOT SHOWN. BE RESPONSIBLE FOR ANY AND ALL DAMAGE WHICH MAY OCCUR DUE TO FAILURE TO LOCATE AND PROTECT ALL CONCEALED UTILITIES.
11. COMPLY WITH ALL JURISDICTIONAL AGENCY REQUIREMENTS AND REGULATIONS. PERFORM ALL WORK ON THIS PROJECT IN COMPLIANCE WITH THE OCCUPATIONAL SAFETY AND HEALTH STANDARDS 29 CFR 1910 AND 1926 OF THE U.S. DEPARTMENT OF LABOR AND THE AMERICANS WITH DISABILITIES ACT ACCESSIBILITY GUIDELINES.
12. FINAL CONNECTIONS TO EQUIPMENT SHALL BE AS PER MANUFACTURER'S WIRING DIAGRAMS, DETAILS AND INSTRUCTIONS. BE RESPONSIBLE TO PROVIDE MATERIALS AND EQUIPMENT COMPATIBLE WITH EQUIPMENT ACTUALLY SUPPLIED.
13. PROVIDE PERMITS AND INSPECTIONS REQUIRED BY JURISDICTIONAL AGENCIES.
14. PROVIDE SET OF RECORD DRAWINGS TO ARCHITECT. DRAWINGS SHALL INCLUDE ALL ADDENDUM ITEMS, CHANGE ORDERS, ALTERATIONS, REROUTINGS, ETC.
15. SUBMIT SAMPLES OF ALL EXPOSED PRODUCTS, MATERIALS, PAINTING SYSTEMS, ETC. FOR ARCHITECT'S REVIEW, COLOR SELECTION OR COLOR VERIFICATION PRIOR TO ORDERING ITEMS.
16. DO NOT ALLOW DIRT, DEBRIS OR DISCARDED MATERIALS TO ACCUMULATE ON SITE. REMOVE PROMPTLY EACH DAY.
17. ASSIGN THE WORK OF MOVING, REMOVAL, CUTTING, PATCHING AND REPAIR TO TRADES UNDER CONTRACTOR SUPERVISION TO CAUSE THE LEAST DAMAGE TO EACH TYPE OF WORK ENCOUNTERED.
18. PATCHING OF FINISH MATERIALS TO MECHANICS SKILLED IN THE WORK OF THE FINISH TRADE INVOLVED.
19. PROTECT NEW WORK FROM WEATHER DURING CONSTRUCTION. PROVIDE WEATHER PROTECTION AND OTHER FACILITIES AND PROTECTION AS NEEDED TO PREVENT DAMAGE TO NEW WORK.
20. USE OF HAZARDOUS MATERIALS SHALL CONFORM WITH 29 CFR 1910.120 AND 1926.65 OF THE OSHA CODE.
21. REMOVAL OF HAZARDOUS WASTE SHALL COMPLY WITH CURRENT FEDERAL, STATE AND LOCAL REGULATIONS, STANDARDS, LAWS AND REQUIREMENTS.

OPENING SYMBOLS

(NOT ALL OCCUR IN PROJECT)

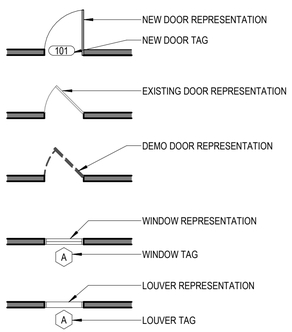

GENERAL SYMBOLS

(NOT ALL OCCUR IN PROJECT)

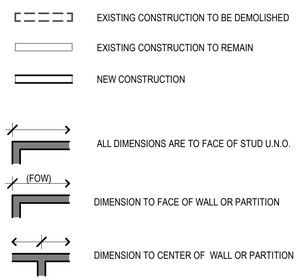

SEH

COA: CA-2111

NOT FOR CONSTRUCTION

Project Owner

SEWARD NEBRASKA

SEWARD, NE
METERING MANHOLE AND SAMPLING BUILDING

2846-2886 WALKER ROAD
SEWARD, NE 68434

This drawing is an instrument of service and shall remain the property of Short Elliott Hendrickson, Inc. (SEH). This drawing, concepts and ideas contained herein shall not be used, reproduced, revised, or retained without the express written approval of SEH.

Submission or distribution of this drawing to meet official or regulatory requirements or for purposes in connection with the project is not to be construed as publication in derogation of any of the rights of SEH.

COPYRIGHT © 2024
Short Elliott Hendrickson, Inc.
All Rights Reserved

SEH Project	SEWAC 163917
Checked By	TDS
Drawn By	TDS
Project Status	**Issue Date**
CLIENT REVIEW	02/13/2026

REVISION SCHEDULE

REV. #	DESCRIPTION	DATE

GENERAL INFORMATION AND ABBREVIATIONS

GA001

THIS BAR IS INTENDED TO BE 1" PRINTED AT FULL SCALE 2/11/2026 2:19:55 PM

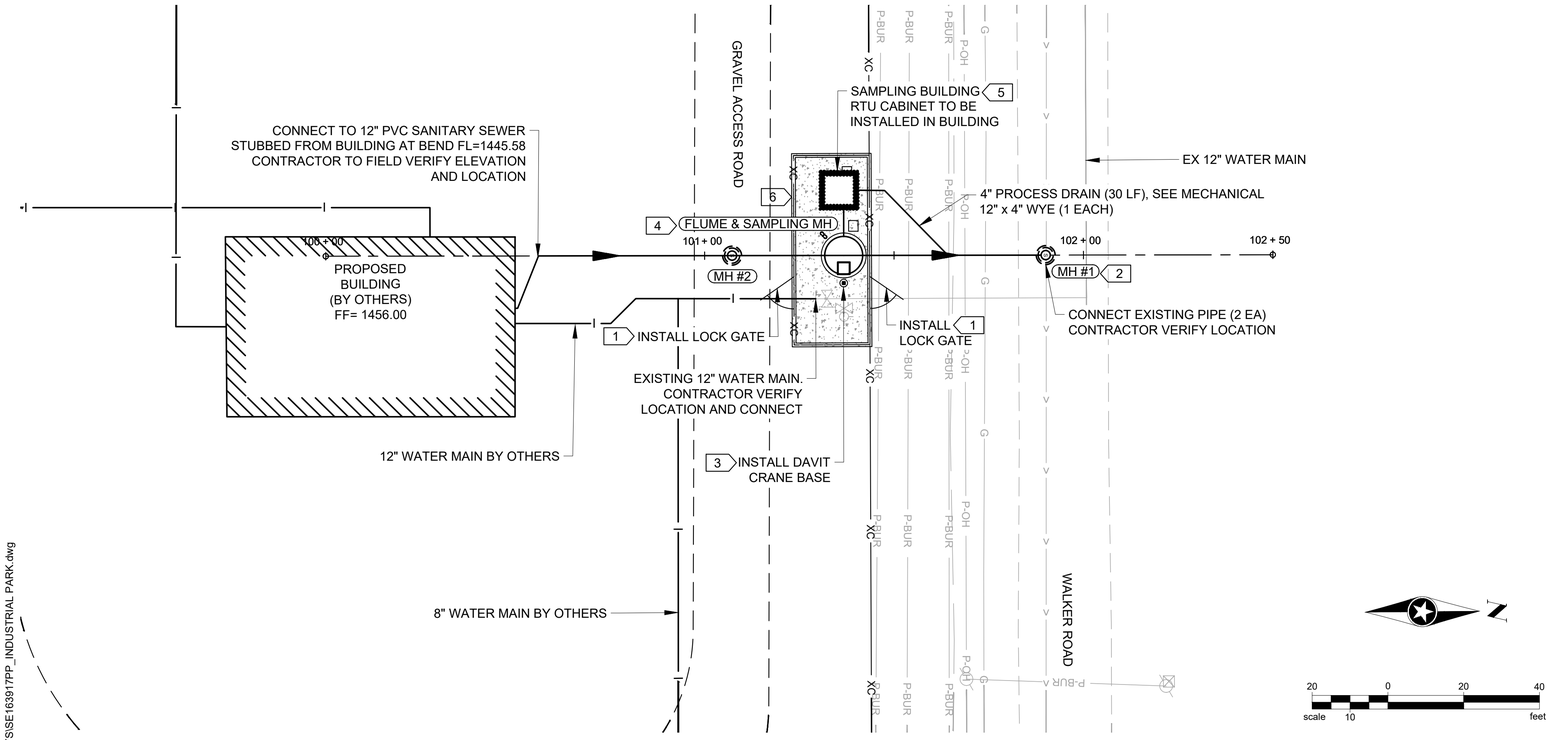

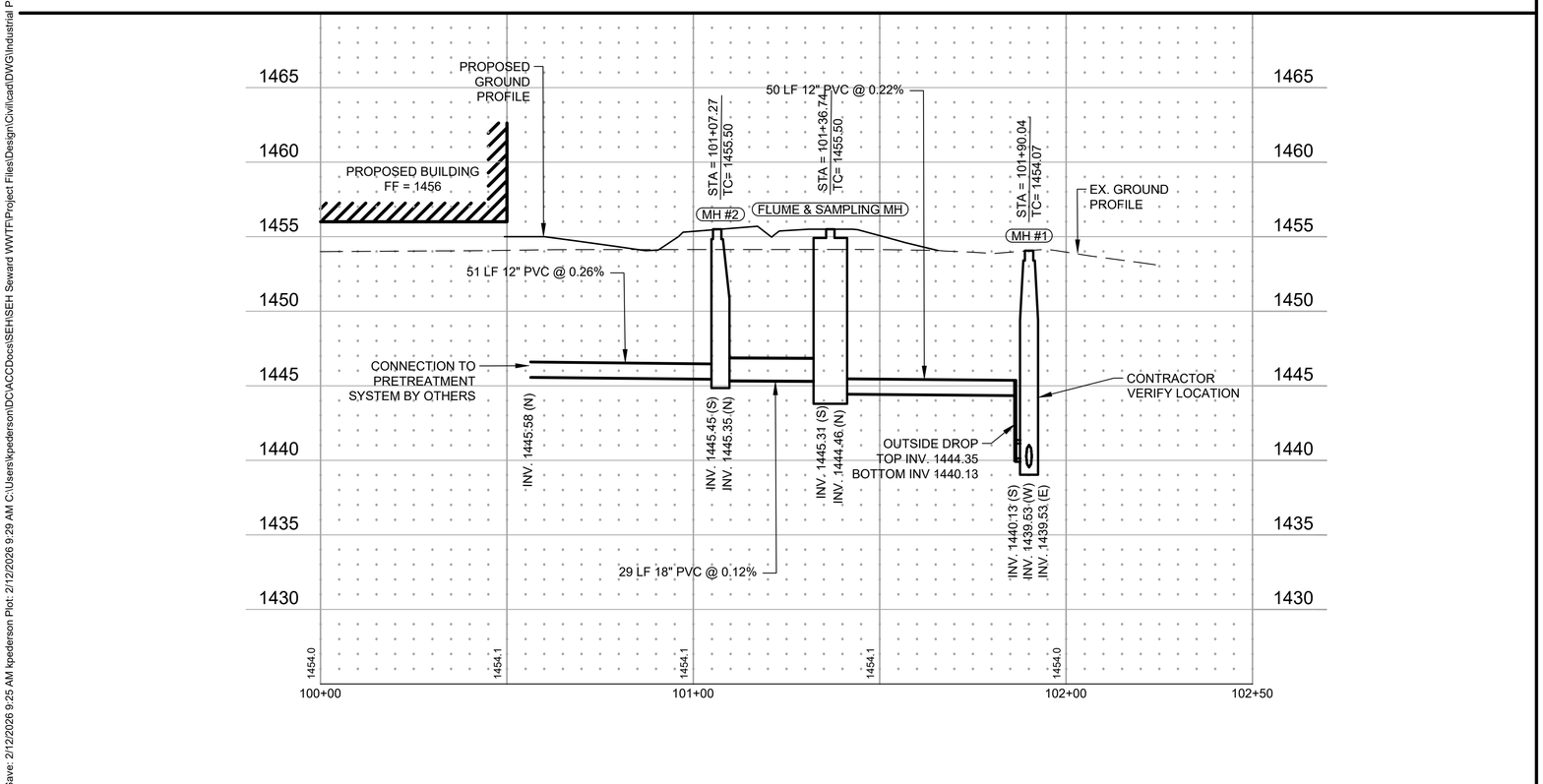

GENERAL NOTES:

1. CONTRACTOR SHALL COORDINATE LOCATIONS AND ELEVATIONS OF MH STRUCTURES PRIOR TO CONSTRUCTION BASED ON THE INDUSTRIAL FACILITY DESIGN.
2. COORDINATE WITH UTILITY COMPANIES PRIOR TO INSTALLING ANY UTILITIES.
3. USE PIPE TRENCH BEDDING DETAIL TO CONSTRUCT ALL PIPING UNLESS NOTED OTHERWISE. (3/C502)
4. PROPER EROSION AND SEDIMENT CONTROL AND TURF ESTABLISHMENT SHOULD BE ACCOMPLISHED IN ACCORDANCE WITH SWPPP AND TO THE CITY'S ACCEPTANCE.
5. NOTIFY OWNER AND ENGINEER OF ANY CHANGED IN ELEVATIONS OF LOCATIONS FOR THIS DESIGN BASED ON THE INDUSTRIAL FACILITY DESIGN.

KEYNOTES:

1. SEE GATE DETAIL (4/C503)
2. OUTSIDE DROP MANHOLE SEE DETAIL (5/C502)
3. DAVIT CRANE BASE SEE DETAIL (1/C502)
4. FLUME AND SAMPLING MANHOLE SEE DETAIL (1/C501)
5. SAMPLING BUILDING SEE DETAIL (1/P101)
6. PERIMETER FENCE SEE DETAILS (2/C503) (3/C503)

LEGEND

- SANITARY SEWER PIPE
- MANHOLE
- WATER MAIN
- YARD HYDRANT
- GATE VALVE AND BOX
- CONCRETE WALK

SEH

NOT FOR CONSTRUCTION

Project Owner

SEWARD NEBRASKA

SEWARD, NEBRASKA
METERING MANHOLE AND SAMPLING BUILDING
2847-2886 WALKER ROAD
SEWARD, NE 68434

This drawing is an instrument of service and shall remain the property of Short Elliott Hendrickson, Inc. (SEH). This drawing, concepts and ideas contained herein shall not be used, reproduced, revised, or retained without the express written approval of SEH.

Submission or distribution of this drawing to meet official or regulatory requirements or for purposes in connection with the project is not be construed as publication in derogation of any of the rights of SEH.

COPYRIGHT © 2024 Short Elliott Hendrickson, Inc. All Rights Reserved

SEH Project	SEWAC 163917
Checked By	CRB
Drawn By	KKP
Project Status	Issue Date
CLIENT REVIEW	02/13/2026

REVISION SCHEDULE

REV. #	DESCRIPTION	DATE

PLAN AND PROFILE

C101

Save: 2/12/2026 9:25 AM kpederson Plot: 2/12/2026 9:29 AM C:\Users\kpederson\DC\ACCDocs\SEH\SEH Seward WWTF\Project Files\Design\Civil\cad\DWG\Industrial Park\SHEETS\SE163917PP_INDUSTRIAL PARK.dwg

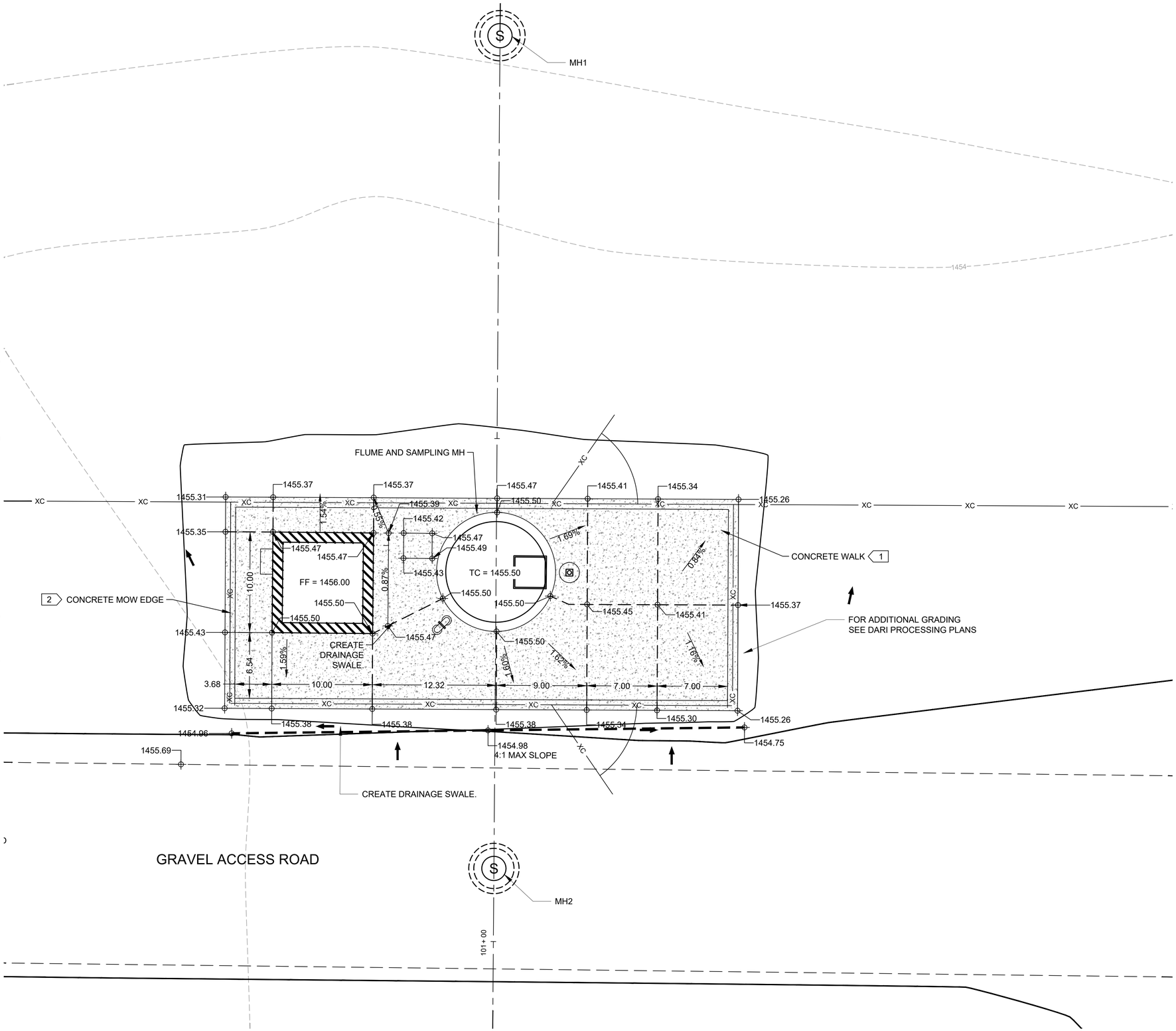

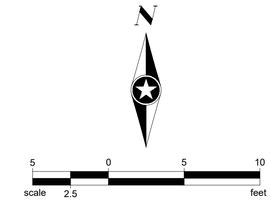

LEGEND

- MANHOLE
- CONCRETE SURFACING
- CONCRETE JOINT

KEYNOTES:

1. FOR CONCRETE WALK SEE DETAIL 1/C503
2. FOR CONCRETE MOW EDGE SEE DETAIL 2/C503

NOTES:

1. CONCRETE WALK SLOPES NOT TO EXCEED 2%.
2. ALL SPOT ELEVATIONS ARE TO TOP OF CONCRETE WALK SURFACE.
3. FFE OF SAMPLING BUILDING = 1456.00
4. TOP OF FLUME AND SAMPLING MANHOLE = 1455.50
5. CONTRACTOR TO VERIFY ELEVATIONS PRIOR TO CONSTRUCTION.

BUILDING CORNERS:
NW CORNER:
N=81726.44
E=88637.66
NE CORNER:
N=81726.34
E=88647.66
SE CORNER:
N=81716.34
E=88647.56
SW CORNER
N=81716.44
E=88637.56

CONCRETE MOW EDGE
NW CORNER:
N=81729.92
E=88632.95
NE CORNER:
N=81729.67
E=88683.95
SE CORNER:
N=81708.68
E=88683.85
SW CORNER
N=81708.92
E=88632.85

CENTER OF MH1:
N=81775.77
E=88660.23

CENTER OF FLUME AND SAMPLING MH:
N=81722.47
E=88659.84

CENTER OF MH2:
N=81693.00
E=88659.63

SEH

NOT FOR CONSTRUCTION

Project Owner
SEWARD NEBRASKA

SEWARD, NEBRASKA
METERING MANHOLE AND SAMPLING BUILDING
2847-2886 WALKER ROAD
SEWARD, NE 68434

This drawing is an instrument of service and shall remain the property of Short Elliott Hendrickson, Inc. (SEH). This drawing, concepts and ideas contained herein shall not be used, reproduced, revised, or retained without the express written approval of SEH.

Submission or distribution of this drawing to meet official or regulatory requirements or for purposes in connection with the project is not be construed as publication in derogation of any of the rights of SEH.

COPYRIGHT © 2024
Short Elliott Hendrickson, Inc.
All Rights Reserved

SEH Project	SEWAC 163917
Checked By	CRB
Drawn By	KKP

Project Status	Issue Date
CLIENT REVIEW	02/13/2026

REVISION SCHEDULE

REV. #	DESCRIPTION	DATE

GRADING AND PAVEMENT LAYOUT

C102

Save: 2/12/2026 9:25 AM kpederson Plot: 2/12/2026 9:30 AM C:\Users\kpederson\DC\ACCDocs\SEH\SEH Seward WWTF\Project Files\Design\Civil\cad\DWG\Industrial Park\SHEETS\SE163917GP_INDUSTRIAL PARK.dwg

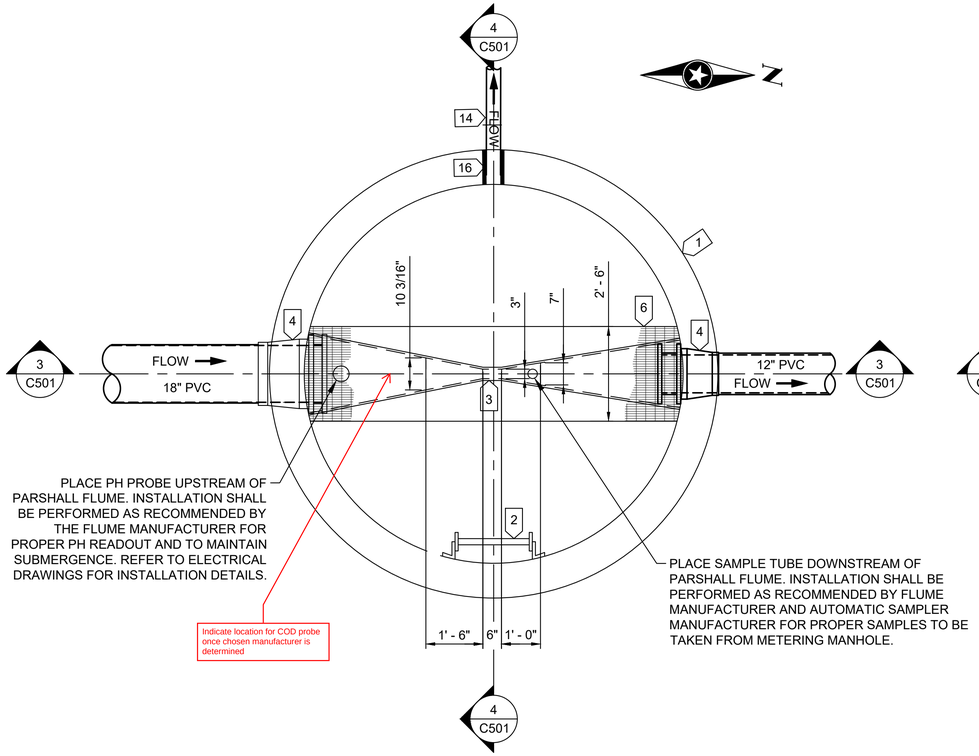

1 C501 PLAN VIEW AT EL. 1448.00
SCALE: 1/2" = 1'-0"

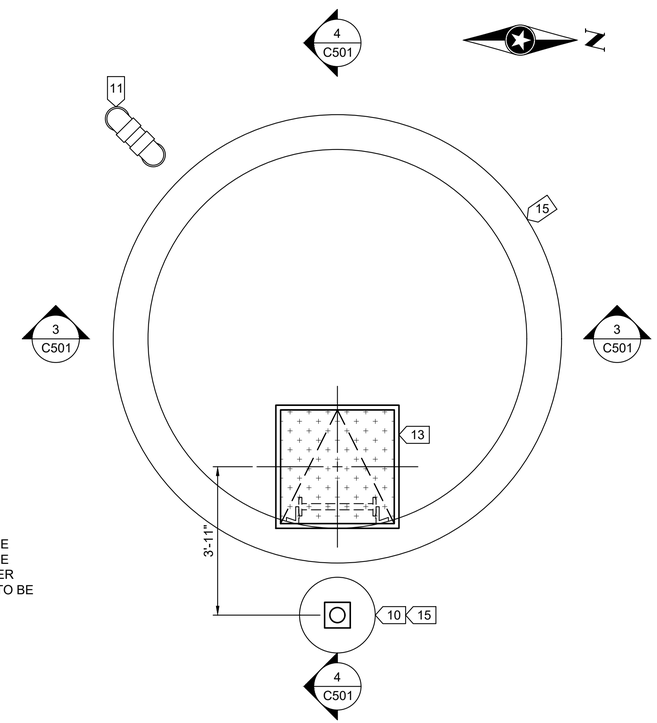

2 C501 PLAN VIEW AT EL. 1455.50
SCALE: 1/2" = 1'-0"

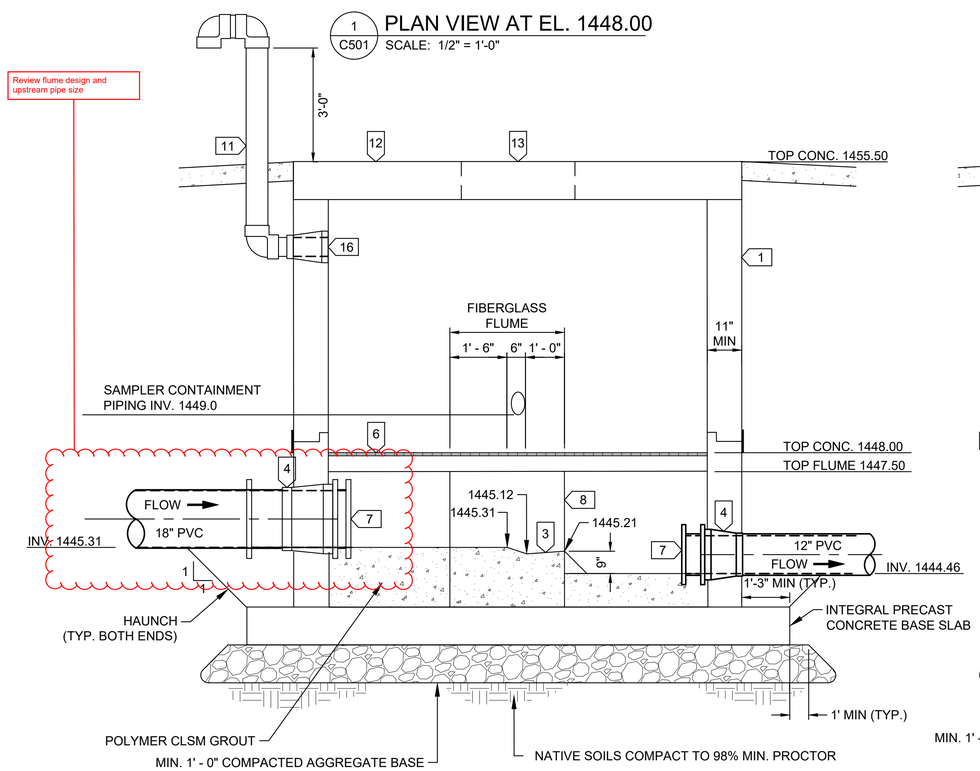

3 C501 SECTION VIEW
SCALE: 1/2" = 1'-0"

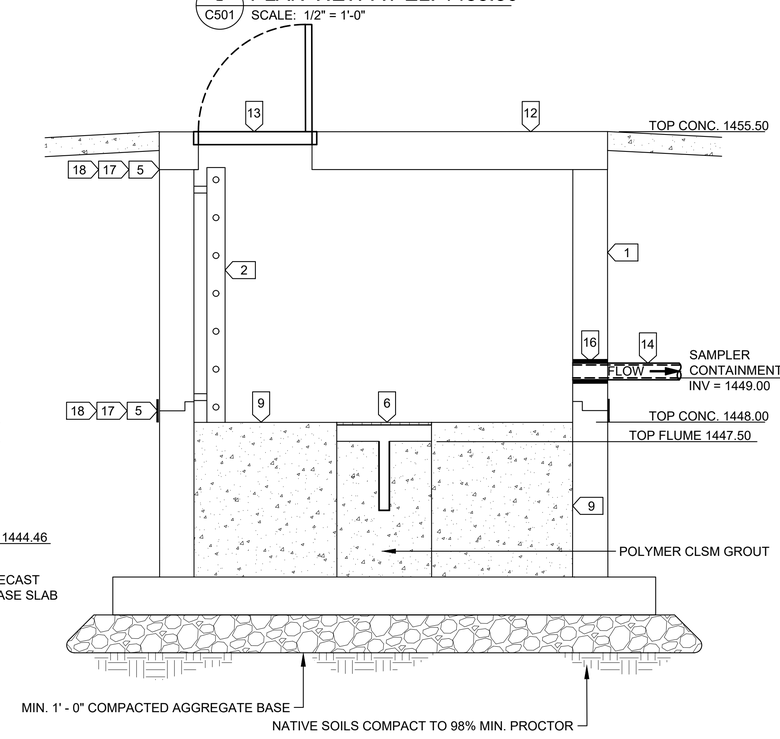

4 C501 SECTION VIEW
SCALE: 1/2" = 1'-0'

NOTES:

1. STAFF GAUGE ON THE INSIDE OF THE FLUME TO BE PROVIDED BY FLUME MANUFACTURER.

KEYNOTES:

1. 10' INSIDE DIAMETER POLYMER CONCRETE PRECAST MANHOLE. TYPICAL GASKET JOINT AS RECOMMENDED BY PRECAST MANUFACTURER. LIFTING HOLES WHICH PENETRATE THROUGH SECTION WALLS ARE NOT PERMITTED.
2. FRP ACCESS LADDER. SEE DETAIL. 10/S501
3. PROVIDE 3-IN STANDARD SIZE FIBERGLASS PARSHALL FLUME PER ASTM D1941. REFER TO MANUFACTURER REQUIREMENTS FOR INSTALLATION. REFER TO SECTION 43 22 53.
4. COORDINATE CONNECTOR AND SEAL WITH STRUCTURE FABRICATOR AND FLUME MANUFACTURER TO ENSURE A WATERTIGHT CONNECTION.
5. INSTALL BUTYL RUBBER MASTIC STRIP SEAL AT ALL CONCRETE JOINTS.
6. 1 1/2" FRP GRATING WITH 100 PSF LL CAPACITY. PROVIDE A SINGLE REMOVABLE PIECE SEE STRUCTURAL DETAILS. 8/S501 9/S501
7. DESIGN AND LOCATE AND CONNECT END ADAPTOR RELATIVE TO THE FLUME AS RECOMMENDED BY THE FLUME MANUFACTURER TO ENSURE ACCURATE FLOW MEASUREMENT. PROVIDE FLEXIBLE SLEEVE COUPLINGS OR HOBAS FWC COUPLING ASSEMBLY OR OTHER MEANS OF CONNECTION AS RECOMMENDED BY MANUFACTURER. SEAL PIPE AND END ADAPTORS TO PROVIDE NO GAP AND A WATERTIGHT CONNECTION.
8. FIBERGLASS TRANSITION SECTION. PROVIDED BY FLUME MFG.
9. POLYMER CONCRETE USED THROUGHOUT. SLOPE CONCRETE FLOOR 1/4-IN / 1 FT TOWARDS CHANNEL ON BOTH SIDES OF FLUME. ALL EXPOSED CONCRETE SHALL BE POLYMER CONCRETE.
10. FLOOR MOUNT CAST-IN-PLACE STAINLESS STEEL SLEEVE DAVIT BASE SEE DETAIL. SEE STRUCTURAL FOR FOUNDATION DETAIL. CONTRACTOR SHALL PROVIDE A SINGLE STAINLESS STEEL DAVIT CRANE AND REFERENCED IN SECTION 41 22 00. 1/C502 7/S501
11. 6" SCH 80 PVC. PROVIDE SCREEN AT END OF VENT PIPE. 1/4" SST BARS BY 1-1/2" SPACING BOTH WAYS.
12. PRECAST COVER CONNECTION. SEE DETAIL. 2/C502
13. 36" X 36" SINGLE LEAF ALUMINUM ACCESS HATCH WITH SAFETY GRATING. COORDINATE SIZE AND LOCATION WITH PRECAST MANUFACTURER. REFER TO SECTION 08 31 00 FOR DETAILS.
14. 4" SCH 80 PVC WITH POLYETHYLENE (PE) CARRIER TUBING FROM SAMPLER. USE MECHANICAL SEAL OR WATERTIGHT PIPE CONNECTION AT WALL CONNECTION. SEE SAMPLING BUILDING FOR CONTINUATION.
15. 1/2" EXPANSION MATERIAL AROUND PERIMETER OF PRECAST MANHOLE AND DAVIT CRANE FOUNDATION - SEE STRUCTURAL.
16. WATERTIGHT TYPE A PIPE CONNECTION. SEE DETAIL. 7/C502
17. CONTINUOUS SEALER REQUIRED AT ALL JOINTS.
18. CORE DRILLING AT JOINTS IS NOT PERMITTED.

SEH

NOT FOR CONSTRUCTION

Project Owner
SEWARD NEBRASKA

SEWARD, NEBRASKA
METERING MANHOLE AND SAMPLING BUILDING
2847-2886 WALKER ROAD
SEWARD, NE 68434

This drawing is an instrument of service and shall remain the property of Short Elliott Hendrickson, Inc. (SEH). This drawing, concepts and ideas contained herein shall not be used, reproduced, revised, or retained without the express written approval of SEH.

Submission or distribution of this drawing to meet official or regulatory requirements or for purposes in connection with the project is not be construed as publication in derogation of any of the rights of SEH.

COPYRIGHT © 2024
Short Elliott Hendrickson, Inc.
All Rights Reserved

SEH Project	SEWAC 163917
Checked By	CRB
Drawn By	KKP
Project Status	Issue Date
CLIENT REVIEW	02/13/2026

REVISION SCHEDULE

REV. #	DESCRIPTION	DATE

FLUME AND SAMPLING MANHOLE DETAILS

C501

Save: 2/12/2026 9:24 AM kpederson Plot: 2/12/2026 9:30 AM C:\Users\kpederson\DC\ACCDocs\SEH\SEH Seward WWTF\Project Files\Design\Civil\cad\DWG\Industrial Park\SHEETS\SE163917DT_INDUSTRIAL PARK.dwg

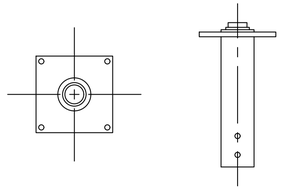

NOTES:
1. PRODUCT: STAINLESS STEEL THERN COMMANDER 5PT5 FLUSH MOUNTED BASE.
2. COORDINATE WITH MAUNFACTURER FOR SIZE SEE STRUCTURAL DETAIL 7/S501 FOR FOUNDATION REQUIREMENTS.

1 / C502 FLOOR MOUNT CAST-IN-PLACE SLEEVE DAVIT BASE

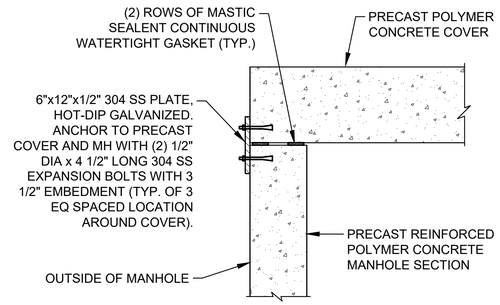

2 / C502 PRECAST COVER CONNECTION DETATIL

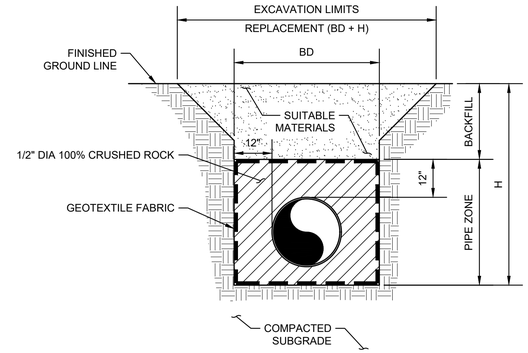

NOTES:
1. CONTRACTOR SHALL CONSTRUCT TRENCH AND PROVIDE PROTECTIVE MEASURES AS REQUIRED TO COMPLY WITH OSHA REGULATIONS.

3 / C502 PIPE TRENCH BEDDING DETAIL

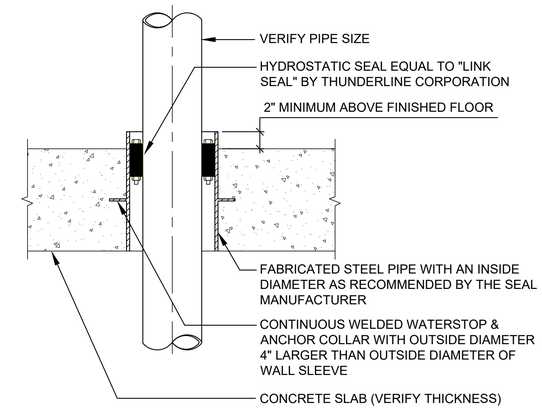

4 / C502 SEALED FLOOR SLEEVE DETAIL

NOTES:
1. ALL DROP SECTIONS SHALL MATCH INCOMING PIPE SIZE UNLESS OTHERWISE NOTED.
2. COAT INTERIOR OF DROP MH BASED ON ONE OF THE MANUFACTURERS LISTED BELOW:
   SHERWIN WILLIAMS - FIRST COAT MACROPOXY 5500 LT 6-8 MILS
   SECOND COAT POLYCOTE 115 80-100 MILS
   TNEMEC - FIRST COAT SERIES N140 POTA-POX PLUS 4-6 MILS
   SECOND COAT SERIES 406 25-75 MILS

FILL BUGHOLES AND VOIDS WITH STEEL SEAM FT 910 OT DURAPLATE 300 FOR SHERWIN WILLIAMS COATINGS.
FILL BUGHOLES AND VOIDS WITH SERIES 215 OR SERIES 218 FOR TNEMEC COATINGS.

FOLLOW ALL OTHER MANUFACTURER RECOMMENDATIONS FOR COATING INSTALLATION.

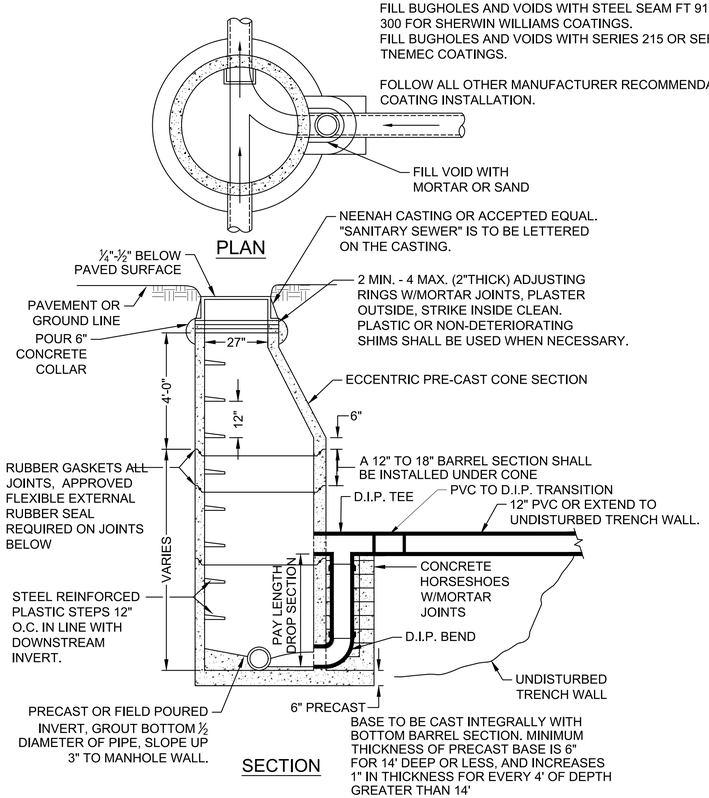

5 / C502 OUTSIDE DROP MANHOLE DETAIL

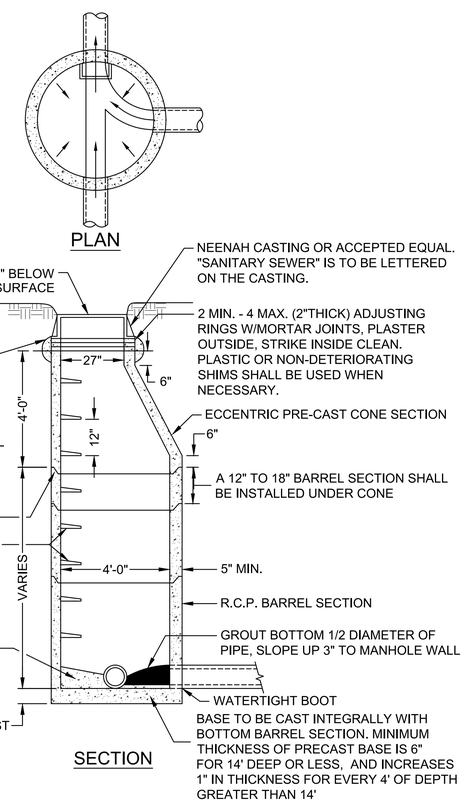

6 / C502 MANHOLE DETAIL

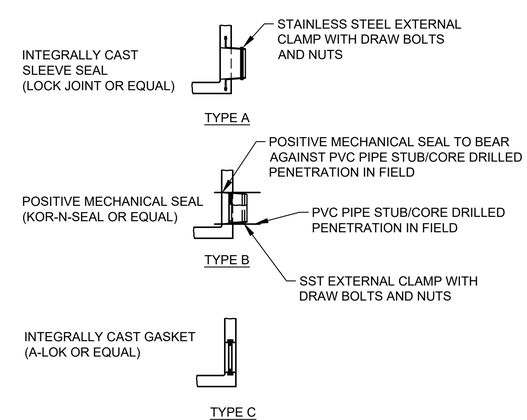

7 / C502 WATERTIGHT PIPE CONNECTIONS

SEH

NOT FOR CONSTRUCTION

Project Owner
SEWARD NEBRASKA

SEWARD, NEBRASKA
METERING MANHOLE AND SAMPLING BUILDING
2847-2886 WALKER ROAD
SEWARD, NE 68434

This drawing is an instrument of service and shall remain the property of Short Elliott Hendrickson, Inc. (SEH). This drawing, concepts and ideas contained herein shall not be used, reproduced, revised, or retained without the express written approval of SEH.

Submission or distribution of this drawing to meet official or regulatory requirements or for purposes in connection with the project is not be construed as publication in derogation of any of the rights of SEH.

COPYRIGHT © 2024
Short Elliott Hendrickson, Inc.
All Rights Reserved

SEH Project	SEWAC 163917
Checked By	CRB
Drawn By	KKP

Project Status	Issue Date
CLIENT REVIEW	02/13/2026

REVISION SCHEDULE

REV. #	DESCRIPTION	DATE

DETAILS

C502

Save: 2/12/2026 9:24 AM kpederson Plot: 2/12/2026 9:30 AM C:\Users\kpederson\DC\ACCDocs\SEH\SEH Seward WWTF\Project Files\Design\Civil\cad\DWG\Industrial Park\SHEETS\SE163917DT_INDUSTRIAL PARK.dwg

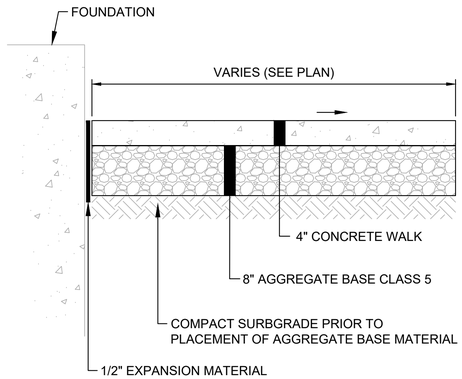

1 C503 CONCRETE WALK DETAIL

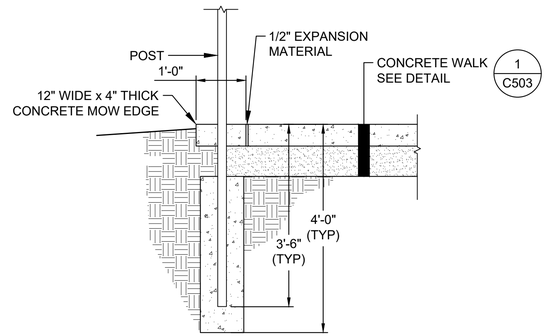

2 C503 MOW EDGE DETAIL

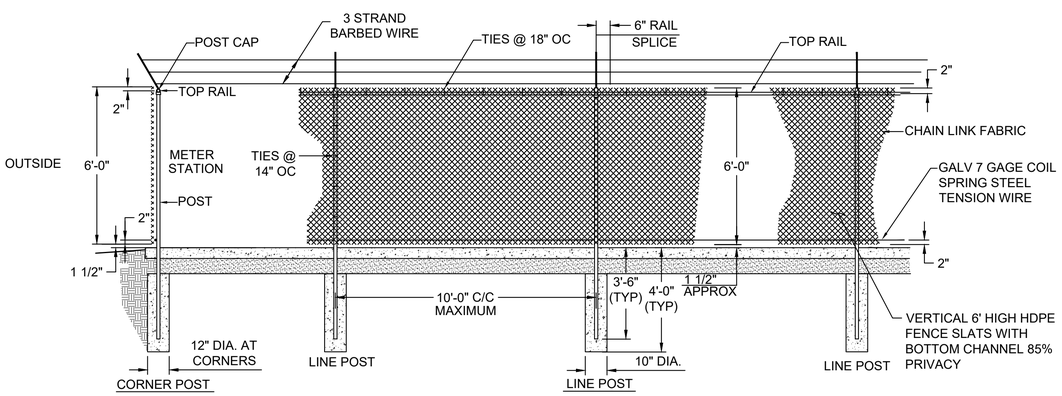

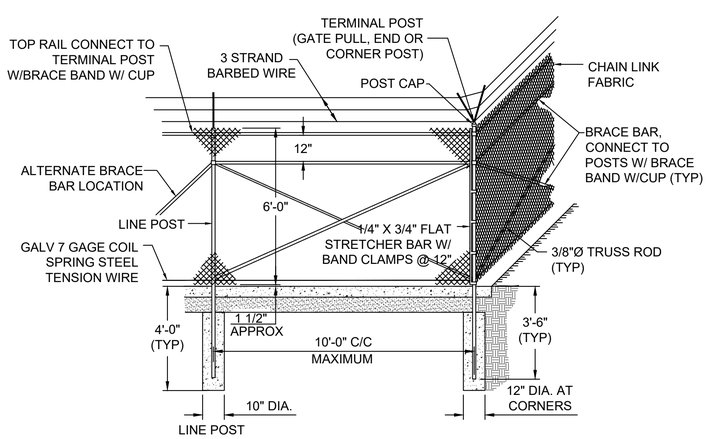

NOTES:

1. TERMINAL POST END, CORNER OR PULL POST: STL 2 1/2" Ø NOM, 5.79 LB/FT.
2. LINE POSTS: STL. 2"Ø NOM, 3.65 LB/FT.
3. BRACE BARS: STL 1 1/4"Ø NOM, 2.27 LB/FT.
4. RAILS: 1.66"Ø NOM, 2.27 LB/FT.
5. PULL POST SPACING SHALL NOT EXCEED 500 FEET.
6. ATTACH TENSION WIRE TO TERMINAL POSTS W/ TENSION CLAMPS.
7. WIRE TIES SHALL BE 9 GAGE GALV STEEL OR 0.179 MIN. ALUM. ALLOY CONFORMING TO ASTM B211, ALLOY 1100-H18. USE 12 1/2 GA GALV STEEL HOG RINGS FOR TENSION WIRE TIES.
8. PROVIDE SLEEVE AT RAIL SPLICES.
9. TOP OF CONCRETE ANCHORAGE SHALL BE CROWNED 1" ABOVE NATURAL GROUND.
10. POSTS CAN BE DRIVEN EXCEPT FOR CORNERS, TERMINAL POST, GATE POSTS, AND FIRST POST FROM CORNERS.
11. CHAIN LINK FABRIC: GALV STEEL 9 GAGE, 2" MESH WITH TWISTED SELVAGE TOP AND BOTTOM.

3 C503 FENCE DETAIL

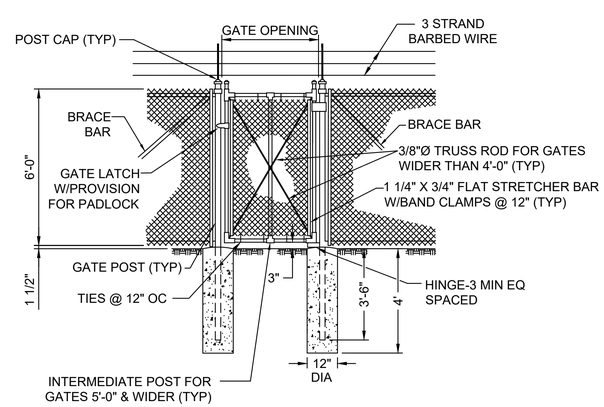

NOTES:

1. GATE POSTS FOR GATES WIDER THAN 4'-0" TO 10'-0": STEEL POST 3 1/2"Ø NOM, 9.11 LBS/FT.
2. FRAMES FOR 4'-0" OR NARROWER GATES: STEEL FRAME 1 1/2"Ø NOM MIN, 2.72 LBS/FT.
3. FRAMES FOR GATES WIDER THAN 4'-0" TO 10'-0": STEEL FRAME 2"Ø NOM, 3.65 LBS/FT.
4. GATES SHALL SWING OUTWARD.

4 C503 SINGLE LEAF PEDESTRIAN GATE

SEH

NOT FOR CONSTRUCTION

Project Owner
SEWARD NEBRASKA

SEWARD, NEBRASKA
METERING MANHOLE AND SAMPLING BUILDING
2847-2886 WALKER ROAD
SEWARD, NE 68434

This drawing is an instrument of service and shall remain the property of Short Elliott Hendrickson, Inc. (SEH). This drawing, concepts and ideas contained herein shall not be used, reproduced, revised, or retained without the express written approval of SEH.

Submission or distribution of this drawing to meet official or regulatory requirements or for purposes in connection with the project is not be construed as publication in derogation of any of the rights of SEH.

COPYRIGHT © 2024
Short Elliott Hendrickson, Inc.
All Rights Reserved

SEH Project	SEWAC 163917
Checked By	CRB
Drawn By	KKP
Project Status	Issue Date
CLIENT REVIEW	02/13/2026

REVISION SCHEDULE

REV. #	DESCRIPTION	DATE

DETAILS

C503

Save: 2/12/2026 9:24 AM kpederson Plot: 2/12/2026 9:30 AM C:\Users\kpederson\DC\ACCDocs\SEH\SEH Seward WWTF\Project Files\Design\Civil\cad\DWG\Industrial Park\SHEETS\SE163917DT_INDUSTRIAL PARK.dwg

ABBREVIATIONS

&	AND
L	ANGLE
@	AT
℄	CENTERLINE
ø	DIAMETER/ROUND
(E)	EXISTING
#	POUND/NUMBER
+/-	PLUS OR MINUS
SQ	SQUARE
AB	ANCHOR BOLT
ADD	ADDENDUM
ADDL	ADDITIONAL
ADH	ADHESIVE
ADJ	ADJUSTABLE
ADJA	ADJACENT
AGGR	AGGREGATE
ALUM	ALUMINUM
ALT	ALTER OR ALTERNATE
ANCH	ANCHOR
ANG	ANGLE
ANOD	ANODIZED
APPROX	APPROXIMATE
ARCH	ARCHITECTURAL
ASPH	ASPHALT (PAVING)
BITUM	BITUMINOUS
BLDG	BUILDING
BLK	BLOCK
BM	BEAM
BOT	BOTTOM
BRG	BEARING
BRKT	BRACKET
BTWN	BETWEEN
C	CHANNEL
CANT	CANTILEVER
CIP	CAST-IN-PLACE
CJ	CONTROL JOINT
CLR	CLEAR
CM	CENTIMETER
CMU	CONCRETE MASONRY UNIT
COL	COLUMN
COMP	COMPOSITE
CONC	CONCRETE
COND	CONDITION
CONN	CONNECTION
CONSTR	CONSTRUCTION
CONT	CONTINUOUS
CONTR	CONTRACTOR
COORD	COORDINATE
CORR	CORRIDOR
CRM	CONCRETE RUBBLE MASONRY
CTR	CENTER
d	PENNY (NAILS)
D	DEEP/DEPTH
DBL	DOUBLE
DET	DETAIL
DIA	DIAMETER
DIAG	DIAGONAL
DIM	DIMENSION
DL	DEAD LOAD
DN	DOWN
DO	DOOR OPENING
DR	DOOR
DWL	DOWEL
DWG	DRAWING
DWR	DRAWER
E	EAST
EA	EACH
EF	EACH FACE
EJ	EXPANSION JOINT
ELEC	ELECTRICAL
ELEV	ELEVATION
ENCL	ENCLOSURE
EQ	EQUAL
EQPT	EQUIPMENT
EW	EACH WAY
EXP	EXPANSION
EXIST	EXISTING
EXT	EXTERIOR
EXTN	EXTENSION
FD	FLOOR DRAIN
FDN	FOUNDATION
FFE	FINISHED FLOOR ELEVATION
FH	FLAT HEAD
FL	FLOOR
FR	FRAME
FRP	FIBERGLASS REINFORCED POLYESTER/PLASTIC
FS	FOOTING STEP
FT	FOOT/FEET
FTG	FOOTING
FV	FIELD VERIFY
GA	GAUGE
GAL	GALLON
GALV	GALVANIZED
GC	GENERAL CONTRACTOR
GB	GRADE BEAM
GEN	GENERATOR
GP	GUSSET PLATE
GR	GRADE
H	HEIGHT/HIGH
HC	HOLLOW CORE
HD	HEAD
HORIZ	HORIZONTAL
HR	HOUR
HS	HEADED STUD
HSS	HOLLOW STRUCTURAL SHAPE
ID	INSIDE DIAMETER (DIMENSION)
IN	INCH
INFO	INFORMATION
INSUL	INSULATION
INT	INTERIOR
INV	INVERT
ISF	INSIDE FACE
JBE	JOIST BEARING ELEVATION
JGBE	JOIST GIRDER BEARING ELEVATION
JST	JOIST
JT	JOINT
K	KIPS
KG	KILOGRAM
KM	KILOMETER
KO	KNOCK-OUT
KW	KILOWATT
L	LENGTH/LONG
LB	POUND
LF	LINEAL FOOT
LL	LIVE LOAD
LLH	LONG LEG HORIZONTAL
LLV	LONG LEG VERTICAL
LOC	LOCATION
LONG	LONGITUDINAL
LTL	LINTEL
LVR	LOUVER
MAS	MASONRY
MAT'L	MATERIAL
MAX	MAXIMUM
MECH	MECHANICAL
MEMB	MEMBRANE
MFR	MANUFACTURER
MFG	MANUFACTURING
MH	MANHOLE
MIN	MINIMUM
MISC	MISCELLANEOUS
MM	MILLIMETER
MTL	METAL
N	NORTH
NIC	NOT IN CONTRACT
NO	NUMBER
NOM	NOMINAL
NS	NO SCALE
NTS	NOT TO SCALE
OA	OVERALL
OC	ON CENTER
OD	OUTSIDE DIAMETER (DIMENSION)
OPNG	OPENING
OPP	OPPOSITE
OSF	OUTSIDE FACE
OVHD	OVERHEAD
PC	PRECAST
PCF	POUNDS PER CUBIC FOOT
PERIM	PERIMETER
PERP	PERPENDICULAR
PL	PLATE
PLYWD	PLYWOOD
PNL	PANEL
PREFAB	PREFABRICATED
PSI	POUNDS PER SQUARE INCH
PSF	POUNDS PER SQUARE FOOT
QT	QUARRY TILE
R	RISER
RAD	RADIUS
REF	REFERENCE/REFER
REINF	REINFORCED/REINFORCING
REQ	REQUIRED
REV	REVISED/REVISION
RH	ROUND HEAD
RLG	RAILING
RM	ROOM
RO	ROUGH OPENING
RTU	ROOF TOP UNIT
S	SOUTH
SCHED	SCHEDULE
SECT	SECTION
SER	STRUCTURAL ENGINEER OF RECORD
SF	SQUARE FOOT
SHT	SHEET
SIM	SIMILAR
SL	SLOPE
SLNT	SEALANT
SLH	SHORT LEG HORIZONTAL
SLV	SHORT LEG VERTICAL
SM	SQUARE METER
SOG	SLAB ON GRADE
SP	SPACED
SPEC	SPECIFICATIONS
SQ	SQUARE
SS	STAINLESS STEEL
STD	STANDARD
STL	STEEL
STRUC	STRUCTURE/STRUCTURAL
SUSP	SUSPEND/SUSPENDED
SYM	SYMMETRICAL
T	TREAD
T&B	TOP AND BOTTOM
TBE	TOP OF BEAM ELEVATION
TD	TRENCH DRAIN
TFE	TOP OF FOOTING ELEVATION
THK	THICK/THICKNESS
THR	THRESHOLD
THRD	THREADED
TOS	TOP OF STEEL
TPE	TOP OF PIER ELEVATION
TRANS	TRANSVERSE
TSE	TOP OF SLAB ELEVATION
TWE	TOP OF WALL ELEVATION
TYP	TYPICAL
UNO	UNLESS NOTED OTHERWISE
VAR	VARIES
VEF	VERTICAL EACH FACE
VERT	VERTICAL
VIF	VERTICAL INSIDE FACE OR VERIFY IN FIELD
VLE	VENEER LEDGE ELEVATION
VLS	VENEER LEDGE STEP
VOF	VERTICAL OUTSIDE FACE
VOL	VOLUME
W	WEST/WIDTH/WIDE
W	WIDE FLANGE (STEEL)
WF	WIDE FLANGE (ALUMINUM)
W/	WITH
W/O	WITHOUT
WP	WATERPROOF / WORKING POINT
WPM	WATERPROOF MEMBRANE
WS	WATER STOP / WALL STEP
WR	WATER RESISTANT
WT	WEIGHT
WWF	WELDED WIRE FABRIC

MATERIAL SYMBOLS

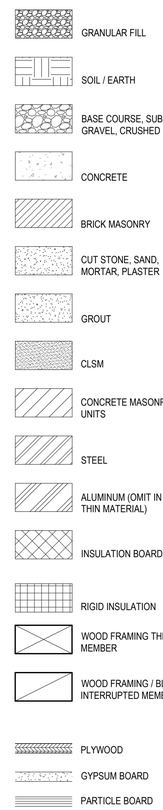

ANNOTATION SYMBOLS

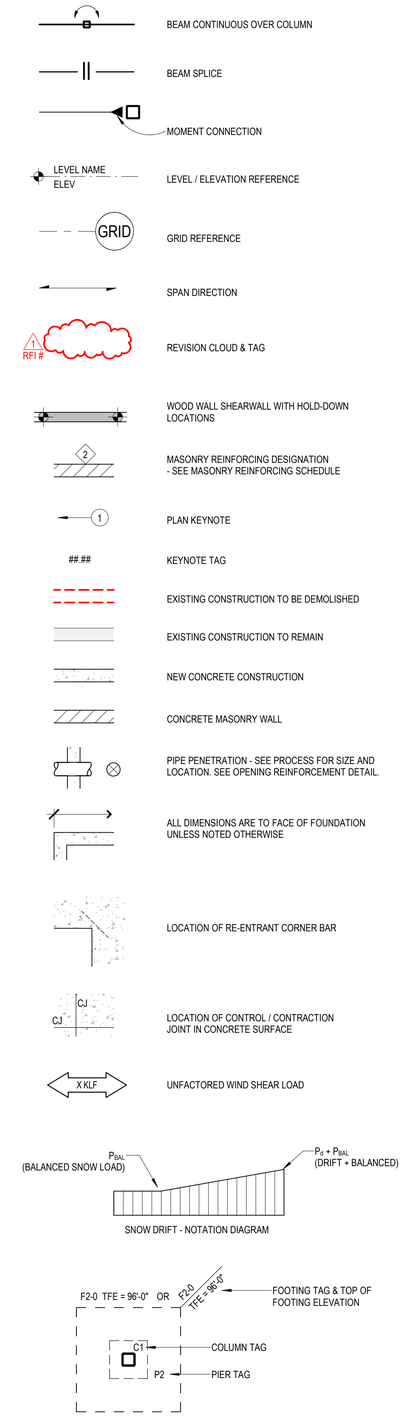

STRUCTURAL TABLES

CLASS B REINFORCING BAR LAP SPLICE TABLE
(note d, e, & f)

	$f_c' = 3000$ psi (note c)		$f_c' = 4000$ psi		$f_c' = 6000$ psi		
BAR SIZE	VERTICAL (note a)	HORIZONTAL (note b)	VERTICAL (note a)	HORIZONTAL (note b)	VERTICAL (note a)	HORIZONTAL (note b)	STD 90° HOOK
#3	21"	28"	19"	24"	15"	20"	6"
#4	29"	37"	25"	32"	20"	26"	8"
#5	36"	46"	31"	40"	25"	33"	10"
#6	43"	56"	37"	48"	30"	39"	12"
#7	62"	81"	54"	70"	44"	57"	14"
#8	71"	93"	62"	80"	50"	66"	16"
#9	80"	104"	70"	90"	57"	74"	19"
#10	91"	118"	78"	102"	64"	83"	22"
#11	100"	131"	87"	113"	71"	92"	24"

a. Vertical bars; and horizontal or diagonal bars with less than 12" of concrete placed below them.
b. Horizontal or diagonal bars with 12" or more of concrete placed below them. (eg. wall horizontals)
c. Use $f_c' = 3000$ psi values for masonry rebar laps. Do not lap splice bars bigger than #8 in masonry. Break off fins in cores of 6" CMU.
d. For epoxy coated bars, multiply these values x 1.20.
e. For laps between different bar sizes, use the greater of these values based on the smaller bar, or these values based on the bigger bar divided by 1.30.
f. Hoop bar laps shall be staggered such that splices do not overlap with bars above, below, or on opposite faces.

REQUIRED SPECIAL INSPECTION AND TESTS

DESCRIPTION OF WORK PER IBC CHAPTER 17	Inspection Frequency: Continuous	Inspection Frequency: Periodic	Testing: Yes	Testing: No	N/A
Metal Construction					
1. Welding					X
2. Details: Bracing, Locations, Etc.					X
3. Bolting					X
4. Open-Web Steel Joists and Joist Girders					X
5. Steel Deck Including Welding Or Mechanical Fastening					X
6. Composite Construction Including Headed Stud Anchors					X
7. Cold Formed Steel Trusses Spanning > 60					X
Concrete Construction					
1. Inspect Reinforcement		X		X	
2. Reinforcing Bar Welding	X		X		
3. Inspect Anchors Cast In Concrete		X		X	
4. Inspect Anchors Post-Installed In Concrete	X		X		
5. Verify Use of Required Design Mix		X		X	
6. Prior to Concrete Placement, Fabricate Specimens For Strength Tests, Perform Slump And Air Content Tests, and Determine The Temperature of The Concrete		X	X		
7. Inspect Concrete Placement For Proper Application Techniques		X		X	
8. Verify Maintenance Of Specified Curing Temperature And Techniques		X		X	
9. Inspect Prestressed Concrete Members					X
10. Inspect Erection of Precast Concrete Members		X		X	
11. Verify In-Situ Concrete Strength Prior to Post-Tensioning Concrete And Prior To Removal Of Shores And Forms From Beams And Structural Slabs					X
12. Inspect Formwork For Shape, Location And Dimensions Of The Concrete Member Being Formed		X		X	
MASONRY CONSTRUCTION - LEVEL A					
1. Verify Compliance With The Approved Submittals					X
MASONRY CONSTRUCTION - LEVEL B					
1. Reinforcement: Size And Spacing					X
2. Prisms					X
Details: Grouting, Lintels, Etc.					X
WOOD CONSTRUCTION					
1. High Load Diaphragms					X
2. Metal Plate Connected Wood Trusses Spanning > 60 ft					X
SOILS					
1. Verify Materials Below Shallow Foundations Are Adequate To Achieve The Design Bearing Capacity		X	X		
2. Verify Excavations Are Extended To Proper Depth And Have Reached Proper Material		X	X		
3. Perform Classification And Testing Of Compacted Fill Materials		X	X		
Verify Use Of Proper Materials, Densities, And Lift Thicknesses During Placement And Compaction Of Compacted Fill	X		X		
4. Prior To Placement Of Compacted Fill, Inspect Subgrade And Verify That Site Has Been Prepared Properly		X	X		
CAST-IN-PLACE DEEP FOUNDATIONS					
1. Observe Drilling Operations And Maintain Complete And Accurate Records For Each Element					X
2. Verify Placement Location And Plumbness, Confirm Element Diameters, Lengths, Embedment Into Bedrock And Bell Diameters (If Applicable), And Adequate End Bearing Strata Capacity. Record Concrete Or Grout Volumes.					X
DRIVEN DEEP FOUNDATION ELEMENTS					
1. Verify Element Materials, Sizes And Lengths Comply With The Requirements					X
2. Determine Capacities Of Test Elements And Conduct Additional Load Tests, As Required					X
3. Inspect Driving Operations And Maintain Complete And Accurate Records For Each Element					X
4. Verify Placement Locations And Plumbness, Confirm Type And Size Of Hammer, Record Number Of Blows Per Foot Of Penetration, Determine Required Penetrations To Achieve Design Capacity, Record Top And Butt Elevations And Document Any Damage To Foundation Element					X

STRUCTURAL SHEET INDEX

S001	GENERAL STRUCTURAL ABBREVIATIONS, SYMBOLS AND TABLES
S002	GENERAL STRUCTURAL NOTES
S101	FOUNDATION AND LEVEL 1 PLANS
S501	CONCRETE DETAILS

CALLOUT SYMBOLS

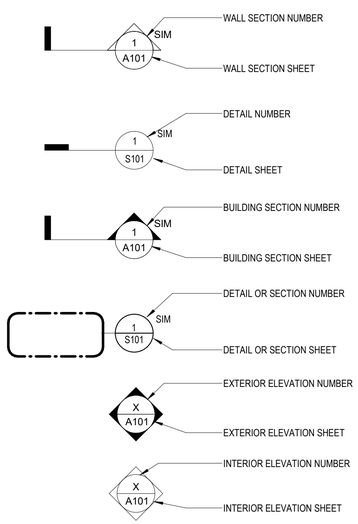

SEH

NOT FOR CONSTRUCTION

Project Owner
SEWARD NEBRASKA

SEWARD, NEBRASKA
METERING MANHOLE AND SAMPLING BUILDING

2846-2886 Walker Road
Seward, NE 68434

This drawing is an instrument of service and shall remain the property of Short Elliott Hendrickson, Inc. (SEH). This drawing, concepts and ideas contained herein shall not be used, reproduced, revised, or retained without the express written approval of SEH.

Submission or distribution of this drawing to meet official or regulatory requirements or for purposes in connection with the project is not to be construed as publication in derogation of any of the rights of SEH.

COPYRIGHT © 2024
Short Elliott Hendrickson, Inc.
All Rights Reserved

SEH Project	SEWAC 163917
Checked By	NRD/SMJ
Drawn By	PAM
Project Status	**Issue Date**
CLIENT REVIEW	02/13/2026

REVISION SCHEDULE

REV. #	DESCRIPTION	DATE

GENERAL STRUCTURAL ABBREVIATIONS, SYMBOLS AND TABLES

S001

THIS BAR IS INTENDED TO BE 1" PRINTED AT FULL SCALE 2/11/2026 3:46:01 PM

GENERAL STRUCTURAL NOTES

1. These notes detail requirements for the design represented in these documents and are to be read in conjunction with the specifications. Any discrepancies or conflicts between the two shall be brought to the attention of the Structural Engineer of Record (SER) for resolution. In these Notes and the Specifications, the word "shall" means "has a duty to."
2. These drawings are for this specific project and no other use is authorized.

GOVERNING BUILDING CODE:

2018 Nebraska State Building Code
2018 International Building Code as adopted and amended by the state building code

DESIGN CODES AND STANDARDS:

All codes adopted by reference in IBC Chapter 35, in addition to the following:
ACI 350 Environmental Engineering Concrete Structures

DESIGN LOADS PER ASCE 7-16

Risk category III

1. Live load:
   - Floor slabs: 150 PSF UNO
   - Roof live load: 20 PSF
2. Dead load:
   - Superimposed roof load: 10 PSF
3. Snow loads:
   - Ground snow load: 25 PSF
   - Importance factor: 1.10
   - Roof snow load: 19 PSF + drifting & unbalanced
   - Snow exposure factor: 1.0
   - Thermal factor: 1.0
4. Rain Loads:
   - Rain Load Intensity: 3.64 in/hr (60-min)
5. Fluid and Lateral Earth Pressure Loads:
   a. Foundation Walls
      1. Designed to be backfilled at equal rates on both sides.
6. Wind loads:
   - Wind speed (3 sec gust): 120 mph
   - Wind exposure: C
   - Mean roof height: 11 feet
   - Kd: 0.85
   - Kzt: 1.0
   - G: 0.85 (rigid building)
   - Structure is: Enclosed
   - Internal press coef: +/-0.18
   - Interior walls: 5 PSF lateral load
7. Seismic loads:
   - Site class: D
   - Ss: 0.081 g
   - S_1: 0.070 g
   - Fa: 1.6
   - Fv: 2.4
   - Sds: 0.086 g
   - Sd1: 0.07 g
   - Ie: 1.25
   - Seismic design category: B

DEFERRED SUBMITTALS

The following items shall be issued as deferred submittals per IBC requirements:

1. Manufacturer of deferred precast structure shall provide anchor reaction loads and calculations signed and sealed by an engineer licensed in the state of the project.

DESIGN / CONSTRUCTION CRITERIA

1. The contractor shall verify dimensions and conditions before construction and notify the engineer of any discrepancies, inconsistencies, or difficulties affecting the work before proceeding.
2. All material, workmanship, and details shall be in accordance with typical competent construction practices, current manufacturer's recommendations, and all applicable codes and government regulations.
3. Any material used in contact with drinking water shall be demonstrated to meet NSF 61.
4. The contractor shall coordinate all disciplines, verifying size and location of all openings, whether shown on structural drawings or not, as called for on process, architectural, mechanical, electrical or other drawings. All conflicts, inconsistencies, or other difficulties affecting structural work shall be called to the architect and engineer's attention for direction before proceeding.
5. Equipment and structural anchor rod sizes, types, embedment, and patterns shall be verified with the manufacturer or fabricator. All anchor patterns shall be templated to ensure accuracy of placement.
6. The contractor shall supply all necessary temporary bracing, shoring, guying, or other means to avoid excessive stresses and to hold structural elements in place during construction.
7. Job site safety (including excavations) is the sole responsibility of the general contractor and their subcontractors.
8. The engineer is not responsible for construction means, methods, techniques or practices. Where drawings and details imply this, they are provided to show final construction. If contractor desires to use different means and methods than implied by these drawings, submit similar details for review.
9. Standard or typical structural details are intended to illustrate design concepts and to specify material and required physical dimensions matching or similar to the referenced locations in the drawing set. Standard details apply whether or not they are cut on the drawings.
10. There is no provision for future vertical or horizontal expansion in the design.

EXISTING CONSTRUCTION

1. Before proceeding with any work within the existing facility, the contractor shall familiarize themself with existing structural and other conditions. It shall be the contractor's responsibility to design, provide, and erect all necessary bracing, shoring and other safeguards to maintain all parts of the existing work in a safe condition during the process of demolition and construction and to protect from damage those portions of the existing work which are to remain.
2. The contractor shall field verify the dimensions, elevations, etc. necessary for the proper construction and alignment of the new portions of the work to the existing work. The contractor shall make all measurements necessary for fabrication and erection of structural members. Any discrepancy shall be immediately brought to the attention of the engineer.
3. Any existing construction damaged in the removal of adjacent elements shall be replaced at the contractor's expense.
4. Where existing concrete elements are to be demolished and reinforcing is not required to remain, cut existing reinforcing flush with concrete to remain and coat with epoxy, unless covered with concrete in final construction.

FOUNDATIONS

1. CAUTION: Existing underground utilities may exist anywhere on the site. Notify owner and Nebraska 811 (800) 331-5666 prior to disturbing any grade or excavation.
2. Material Definitions and Gradations:
   a. Non-frost-susceptible fill
      - 100% passing 1" sieve
      - < 50% passing #40 sieve
      - < 6% passing #200 sieve
      - < 2% organic content
   b. Aggregate Base
      - 100% passing 1" sieve
      - 70-100% passing 3/4" sieve
      - 45-90% passing 3/8" sieve
      - 35-80% passing #4 sieve
      - 20-65% passing #10 sieve
      - 10-35% passing #40 sieve
      - 3-10% passing #200 sieve
      - < 2% organic content
      - Large aggregates through #4 have minimum 25% fractured faces or crushed (per gradation)
   c. Aggregate Filter/Base
      - 100% passing 1" sieve
      - 85-100% passing 3/4" sieve
      - 45-90% passing 3/8" sieve
      - 20-60% passing #4 sieve
      - 0-10% passing #10 sieve
      - 0-6% passing #200 sieve
      - < 2% organic content
      - Large aggregates through #4 have minimum 75% fractured faces or crushed
   d. Granular Structural Backfill
      - 100% passing 1" sieve
      - 0-65% passing #10 sieve
      - 0-65% passing #40 sieve
      - 0-10% passing #200 sieve
      - < 2% organic content

FOUNDATIONS (CONT)

3. Structural foundations consist of wall and spread footings established on material capable of safely supporting 2,000 PSF. The structural engineer is not responsible for the accuracy or content of the subsurface soil conditions described in the specifications, test borings, or geotechnical report. A licensed geotechnical engineer shall be present during construction to test, inspect and verify all assumed soil conditions as required. The licensed geotechnical engineer shall submit a report showing design calculations and signed by the licensed professional engineer in the State of Nebraska.
4. Soil criteria:

Q100/design water elevation	1450.00'
Measured groundwater elevation at the time of drilling	NA
Dewater as required to keep excavations dry	
Frost depth	42 inches (heated building)
	60 inches (unheated structure)
Anticipated max differential settlement	1/2 inch
Anticipated max total settlement	1 inch

5. Limit compaction to hand operated power equipment within 8 feet of wall.
6. More than 8 feet away from walls, place fill in 8-inch loose lifts and compact to 98 percent Standard Proctor beneath foundations, 95 percent otherwise.
7. When placing compacted fill adjacent to foundation walls and piers, place backfill at equal rates on both sides to prevent overturning or structural damage.
8. Contractor shall provide for dewatering.
9. Moisture content in soils beneath building locations should not be allowed to vary after footing excavations and after grading for slabs on grade are completed to a degree that would de-stabilize the compacted soil. If subgrade materials become desiccated or softened by water or other conditions, remove and replace with engineered fill as recommended by the geotechnical engineer. Do not place concrete on frozen ground, nor allow ground beneath foundations to freeze. All foundation work shall be placed on substrate approved and tested by geotechnical engineer of record.
10. Do not place backfill on frozen subgrade. Do not place frozen backfill.
11. Slabs on grade shall be constructed on a subgrade of 24" of low plasticity native material compacted to at least 98 percent of its maximum dry density (standard proctor), and 6 inches of Aggregate Base (as defined above) below the slab compacted to 100 percent standard proctor density. In wet or potentially wet situations, use Aggregate Filter/Base (as defined above).
12. Grading: where not specifically shown on the plans, it is intended that all excavated and backfilled areas shall be graded to slope away from buildings and other structures.

CONCRETE

1. All concrete except as noted in the following paragraphs shall meet the following requirements:
   - Compressive Strength: f'c = 4,000 PSI min at 28 days
   - Water / (cement + pozzolan) ratio: 0.45 max (0.40 max if exposed to sulfates)
2. Concrete used in exterior flatwork and stoop slabs shall meet the following requirements:
   - Compressive Strength: f'c = 4,500 PSI min at 28 days
   - Water / (cement + pozzolan) ratio: 0.42 max
3. Concrete used in strip footings shall meet the following requirements:
   - Compressive Strength: f'c = 3,000 PSI min at 28 days
   - Water / (cement + pozzolan) ratio: 0.48 max
4. Concrete used in CLSM (Controlled Low Strength Material) shall meet the following requirements:
   - Compressive Strength: f'c = 50 psi min, 1,000 PSI max at 28 days
   - Where uncoated steel is embedded in CLSM, cementitious material shall be minimum 40 percent Portland cement, or supplier shall demonstrate pH greater than 7.5.
5. Grout fill used in hydraulic structures shall meet the following requirements:
   - Compressive Strength: f'c = 3,000 PSI min at 28 days
   - Water / (cement + pozzolan) ratio: 0.45 max
6. Concrete and grout exposed to frost (including foundation walls) shall be air entrained 6% +/- 1.5%.
7. Do not add water to concrete at the jobsite without written approval of the SER, and in no case in excess of the water in the approved mix design.
8. No chloride containing admixtures are allowed.
9. All concrete is normal weight UNO.
10. When fly ash is used air-entrained concrete, air entraining shall be adjusted as necessary to account for LOI.
11. Measured from the time water and cement are batched together, no more than 90 minutes shall elapse until concrete is placed. This time shall be reduced by two minutes for every degree that concrete temperature exceeds 75 degrees Fahrenheit. These criteria may be relaxed by the use of set-controlling admixtures.
12. Protect concrete in accordance with ACI 305 and ACI 306 for hot weather concreting and cold weather concreting respectively.
13. Concrete being placed shall be protected from rain. If rain falls on concrete before it has set, or within 3 hours of placement in any event, contractor shall bear cost of testing to prove concrete is unaffected, and shall remove and replace affected concrete to the satisfaction of the engineer.
14. Wet cure (poly and burlap or proprietary blankets kept moist daily) for a minimum of 7 days; sides of footings may be buried after 24 hours. Contractor is responsible for staining caused by burlap in visible areas
15. Coordinate with other trades for sleeves, conduit, electrical grounding wires, inserts, underground utilities, and other items to be embedded into concrete and verify that they are properly installed and supported before casting concrete. Holes through slab or wall shall leave minimum 1 inch clear to reinforcing; shift reinforcing as required. Placement of such items shall be coordinated with reinforcing placement where they would otherwise displace each other. For instance, in areas with a single mat of reinforcing, east-west conduit should be placed with east-west reinforcing and north-south conduit is placed with north-south reinforcing.
16. In no case shall embedments violate the required concrete cover. Conduit and pipes, with their fittings, embedded in concrete shall not be larger in outside dimension than 1/3 the overall thickness of slab, wall, or beam in which they are embedded and shall not be spaced closer than three diameters on center. Conduit and pipes placed within 2 feet below bottom of slabs and footings shall not be spaced closer than three diameters on center and shall be encased in CLSM or concrete vibrated to flow around conduit.
17. No uncoated aluminum items shall be embedded in any concrete. All aluminum surfaces in direct contact with concrete shall receive one coat of 8-12 mil dry film thickness bitumastic.
18. Bevel all exposed corners of concrete 3/4"x3/4".
19. All concrete to be trowel finished shall be tested for air content, whether or not it is purposely air entrained. If concrete contains more than 2 percent entrained air, delay start of finishing to preclude weakened air-rich plane just below surface.

PRECAST CONCRETE

1. Prior to installation, the precast concrete manufacturer shall submit structural calculations and plans to the architect/engineer for review. The structural calculations shall contain an original Professional Engineer's seal and signature by the design engineer licensed in the state where the project is located. Where precast is used as a structural shear diaphragm, calculations shall include shear capacity data for the members in question, topped or untopped.
2. Horizontal precast members with topping shown or noted shall be designed as non-composite unless specifically noted otherwiseUNO.
3. Precast concrete units shall be designed for all potential loading conditions including initial handling and erection stresses, all superimposed dead, live, and lateral loads shown on the contract drawings, and all concentrated loads from mechanical equipment and lifting points. General contractor shall verify mechanical loads with the mechanical contractor and provide to precast designer and SER before design.
4. The precast concrete manufacturer shall be responsible for the design and installation of all precast connection hardware including hangers, embed plates, anchors, clip angles, headers at openings, etc. that are cast into or form a part of the precast units. Precast manufacturer shall provide 1/8 inch thick continuous bearing strips beneath hollowcore slabs and masonry or concrete supports.
5. All roof and wall opening dimensions and locations shown on the plans shall be verified by the contractor and roof manufacturer. Wall openings not contained within a panel width shall be protected by posts or other means during transit and erection.
6. Precast wall panels shall be fully grouted at base.
7. Joints between plank shall be pulled flush and grouted. Maximum distance between edges of planks is 4 inches at any joint. Where partial width planks are required, edge of ripped plank shall be smooth and straight.
8. Where topping is called for: immediately before placing topping, pressure-wash surface of plank and blow clean with oil-free compressed air, then rub with cement slurry as a bonding agent, working just ahead of concrete placement. Surface to be free of standing water but slurry must be wet when topping is placed. Wet cure topping (burlap/poly) for a minimum of 7 days. Topping slabs shall be reinforced with 6x6 - W2.9 x W2.9 welded wire fabric (flat sheets only) or macrosynthetic fibrous reinforcement integral to the mix.
9. Where composite topping is called for, plank shall receive a transverse broom finish at plant and shall have keys grouted minimum 4 days before topping is placed.
10. All horizontal joints and reveals in wall panels shall align within ½ inch or ½ of joint dimension, whichever is less, at all joints between panels.
11. All exposed connection components shall be steel with three coat paint system: moisture-cured zinc-rich urethane primer, epoxy, urethane.

REINFORCING STEEL

1. All concrete is reinforced concrete UNO. This does not apply to CLSM or grout fill. Reinforce all concrete not otherwise shown with same steel as in similar sections or areas. Any details not shown shall be detailed per ACI 315 and meet requirements of ACI 318, current editions.
2. All reinforcing steel shall conform to the requirements of ASTM A615 grade 60 steel. Reinforcing steel shall not be welded without authorization of the SER, and if welded shall be A706 grade 60 steel. Reinforcing to be welded shall only be welded to structural steel, not other reinforcing, UNO. Welded plain wire fabric shall be supplied in sheets, not rolls, and conform to the requirements of ASTM A185.
3. Clear minimum cover of concrete over reinforcing steel shall be as follows UNO:
   - 3" Concrete placed against earth
   - 3" Top mat of base slabs to receive waterstops at wall joint
   - 2" All other concrete
4. All reinforcing shall be tied to crossing reinforcing on at least every other bar (every bar at perimeter), and sufficiently to resist displacement from workers and placement of concrete.
5. All footing dowels shall be accurately positioned and wired in place before casting footing concrete. Provide and install hooked dowels of same size and spacing as vertical reinforcement in all columns and walls, UNO. Position all anchor bolts with templates.
6. Bar lap table can be found on the first general sheet of the structural drawings.
7. Bar lap lengths in concrete and 90 degree end hooks shall be in accordance with the bar lap table UNO. This table lists class 'B' laps. "Lap" indicated in details shall be class 'B.' For epoxy coated reinforcing steel, increase lap length by 50% with c-c bar spacing < 6db and cover to center of bar <3db, otherwise increase by 20%. For masonry reinforcing, use f'c' = 3000 psi values.
8. Bars marked continuous, corner bars, and all vertical steel shall be lapped in accordance with Bar Lap table at splices and embedments, UNO. Splice top bars near midspan and splice bottom bars over supports, UNO.
9. Corner bars shall project minimum 2'-6" beyond inside face of tank UNO. Lap to continuing bar according to Bar Lap table.
10. Slabs on ground with a single mat of reinforcing may be reinforced with FRP bars such as Gator Bar or similar, substituted one for one (same bar size and spacing) as the steel reinforcing called for on the drawings. FRP bar may not be substituted for steel reinforcing for any other purpose without written permission from the SER.
11. Bar support accessories shall be as specified in latest edition of the ACI detailing handbook and the concrete reinforcing steel institute design handbook. Maximum accessory spacing shall be 4'-0" on center, and all accessories on exposed surfaces shall have plastic coated ends. Chairs shall be supported on sand plates as required to keep from sinking into subgrade. WWF shall be supported by continuous bolsters or bars on chairs sufficiently close to prevent sheets from sagging appreciably during concrete placement. Support rebar used at contractor's option shall be extra bars supplied by contractor, not taken from design reinforcing.
12. All exterior stoops, aprons, and concrete stairs shall be reinforced with epoxy coated bars UNO.

POST INSTALLED ANCHOR RODS AND DOWELS

1. UNO, anchors and reinforcing dowels installed in concrete or concrete masonry shall be as noted below. Post-installed anchors shall only be used where shown on the construction documents. Anchors not shown or noted on the drawings, those required by the contractor solely for his means and methods, or those required by mechanical/electrical and carrying less than 100 pounds of non-safety-related items, do not require special inspection.
2. Approved manufacturers are: HILTI, ITW / Redhead, Simpson, Dewalt / Powers, and Rawl.
   a. Post installed anchors shall have current ICC approval in accordance with ACI 355 and ICC ES corresponding to anchor base material.
   b. Submit product data and current ICC ES report or IAPMO report showing product is compliant with project code requirements for review.
   c. Contractor shall arrange for manufacturer's rep to train all installers on the complete installation process. A letter of procedure stating method of drilling, the product for use, the complete installation procedure, manufacturer training date and a list of the personnel trained on anchor installation shall be submitted to the engineer.
   d. Substitution requests of alternate products must be approved in writing by structural engineer of record prior to use by providing technical data that the substituted product is capable of meeting performance requirements of specified products including but not limited to the following basis of design parameters ACI 355.2 or ACI 355.4 qualifications.
3. Permanent anchors exposed to earth, weather, or corrosive environments, including all anchors in wet areas of WWTP and water treatment plant work, and anchors engaging stainless steel or aluminum members, shall be stainless steel type AISI 304 or 316; anchors in contact with sewage or chloride deicer runoff shall be type 316. Otherwise, anchors shall be zinc plated, minimum ASTM A36 material unless ASTM A193 grade B7 is noted in the drawings, and shall be according to ASTM F1554. Reinforcing dowels shall be of the same size (U.N.O.), material and coating (if any) as the continuing reinforcing.
4. Where expansion anchors are called for, contractor may substitute screw type anchors with self-tapping threads or adhesive anchors of the same size and embedment, subject to review of capacity by the engineer for the product substituted. Where adhesive anchors are called for, other types shall not be substituted. Screw type anchors shall not be re-used on permanent work.
5. Adhesive shall have a current ICC ES report. Use high viscosity adhesive and placement devices in consultation with the manufacturer for overhead work. Adhesive anchors in overhead or horizontal installation shall be subject to continuous special inspection during installation and shall only be performed by installers certified per ACI/CRSI Adhesive Anchor Certification Program Section 17.8.2 or Engineer approved equivalent. Use low temperature formulations for cold weather work. Do not apply load to anchors until their capacity has been assured.
6. Anchors installed in concrete masonry and precast hollow core concrete shall be installed in cores grouted solid. Minimum grout strength f'g = 3,000 PSI. Minimum 12 inches of grout each way along horizontal cores from anchor. Vertical cores shall be grouted full height. Anchors installed in masonry shall not be installed within 1 1/2 inches of any head joint unless block are square end and mortared across full width of head joint, or filled bond beam.
7. Holes shall be drilled dry, cleaned, and maintained until installation in accordance with manufacturer's recommendations and ICC-ES report using standard rotary-impact bits and oil-free compressed air. Diamond core bits shall not be used unless specifically approved by the manufacturer.
8. The general contractor shall engage a testing company to locate existing reinforcing bars, PT tendons, and embedded items, by non-destructive means (GPR, X-ray, or other approved means) prior to drilling for installation of anchors. Notify EOR of any conflicts with existing embedded items. Do not cut or damage existing reinforcing or embedded items unless approved by the EOR.
9. Maintain critical spacing and edge/corner distances as recommended by manufacturer UNO in the drawings.
10. UNO, anchors shall be installed to the following minimum embedments:

	Diameter	CIP Concrete (1)	Grouted CMU (1)
Expansion:	3/8 inch	3 inches	4 inches
	1/2 inch	3 1/4 inches	4 1/2 inches
	5/8 inch	4 inches	5 inches
	3/4 inch	4 3/4 inches	6 1/4 inches
Screw:	3/8 inch	3 inches	4 inches
	1/2 inch	4 1/2 inches	5 1/2 inches
	5/8 inch	4 3/4 inches	6 1/4 inches
	3/4 inch	6 1/4 inches	8 inches
Adhesive*:	3/8 Inch	3 3/8 inches	4 1/2 inches
	1/2 inch	4 1/2 inches	5 1/2 inches
	5/8 inch	5 5/8 inches	6 3/4 inches
	3/4 inch	6 3/4 inches	8 1/2 inches

(1) Drilled hole shall stop minimum 1 1/2 inches from far face of concrete and minimum 2" from far face of CMU.
*For adhesive at reinforcing bars, increase embedment above by 33%.

11. All anchors shall have intermittent special structural inspection by one of the following, UNO. Load tests shall be to 150 percent of service capacity or 75 percent of ultimate strength, with no appreciable slip, permanent deformation, or concrete damage. Anchors which fail this test shall be replaced at no cost to the project. Two failures in a given installation shall result in mandatory load testing at double the rate noted below.
    a. Expansion and screw anchors:
       - Witness installation with torque wrench according to manufacturer's recommendations and requirements of ICC report;
       - Test all anchors with torque wrench after installation (including load test of 5 percent of installed anchors); or
       - Load test of 10 percent of installed anchors by supplier or third party inspector
    b. Adhesive anchor rods and dowels:
       - Witness installation according to manufacturer's recommendations and requirements of ICC report; or
       - Load test of 10 percent of installed anchors by supplier or third party inspector

SHOP DRAWING REVIEW

1. Short Elliott Hendrickson Inc. (SEH) will review the general contractor's (GC) shop drawings and related submittals (as indicated below) with respect to the ability of the detailed work, when complete, to be a properly functioning integral element of the overall structural system designed by SEH. In general, submittals will not be reviewed for correct quantities or construction considerations. SEH shall review shop drawings and related materials with comments provided that each submission has met the requirements herein. SEH shall return without comment unrequired material or submissions without GC approval stamp.
2. Any items requiring submittal of calculation packages shall have calculations submitted prior to or as part of the shop drawing submittal they accompany. Shop drawings submitted prior to submittal of required calculations will be rejected. All calculations shall be sealed and signed by an engineer licensed in the state of the project. The supplier's engineer must provide calculations for all systems and connections that differ from the drawings. Design shall comply with the requirements in these notes, the drawings and the specifications.
3. Prior to submittal of a shop drawing or any related material to SEH, the GC shall:
   - Review each submission for conformance with the means, methods, techniques, sequences and operations of construction and safety precautions and programs incidental thereto, all of which are the sole responsibility of the GC.
   - Review and approve each submission.
   - Stamp each submission as approved.
4. SEH shall assume that no submission comprises a variation from the contract documents unless the GC advises SEH with written documentation. Should SEH require more than ten (10) working days to perform the review, SEH shall so notify the GC. Submittals shall include drawings and related material (if any) as indicated below.
   - Concrete mix designs and material certificates including admixtures, compounds applied to the concrete after placement, and associated product data. See specifications.
   - Aggregate tests and concrete test history for each mix design, with the submission of concrete mix designs.
   - Reinforcing steel shop drawings including erection drawings and bending details. Bar list will not be reviewed for correct quantities. Include elevations of all reinforced concrete masonry walls and all concrete walls with footing steps or other elevation changes, at a scale no smaller than 1/8" = 1'-0" showing all required reinforcing.
   - Precast shop drawings including reinforcing, bearing details, and design calculations.

SPECIAL INSPECTION

1. Special inspection and testing is required according to the table on the first general sheet of the structural drawings. Refer to specification section 01 45 10 for responsibilities. Contractor shall coordinate with SER, testing agency and geotechnical engineer throughout the project.
   - Special Inspections shall be performed in accordance with IBC Chapter 17.
   - Special Inspection of reinforcing steel and anchor rod placement shall be performed prior to concrete placement or during anchor rod installation for adhesive anchors.
   - Continuous inspection during concrete placement is required.
   - Conduct concrete slump tests in accordance with ASTM C143.
   - Obtain set of a four (4) concrete test cylinders each time concrete is placed. Make test cylinders in accordance with ASTM C39.
   - See these Notes for testing of Post-Installed anchors and rebar where installation is not witnessed.
   - It is assumed that precast concrete will be cast on the premises of a fabricator registered and approved to perform such work without Special Inspection. G/C shall submit fabricator documents, standards, and procedures in accordance with IBC 1705.2.
   - Reports of Special Inspections shall be provided, at the frequency noted above, to the Owner, Contractor, and Engineer of Record by the firm contracted to perform Special Inspections.
   - Special Inspection criteria presented above and in specification shall apply to all footings and foundation walls, but does not apply to non-structural slab on grade and site work concrete.

SEH

NOT FOR CONSTRUCTION

Project Owner

SEWARD NEBRASKA

SEWARD, NEBRASKA
METERING MANHOLE AND SAMPLING BUILDING

2846-2886 Walker Road
Seward, NE 68434

This drawing is an instrument of service and shall remain the property of Short Elliott Hendrickson, Inc. (SEH). This drawing, concepts and ideas contained herein shall not be used, reproduced, revised, or retained without the express written approval of SEH.

Submission or distribution of this drawing to meet official or regulatory requirements or for purposes in connection with the project is not to be construed as publication in derogation of any of the rights of SEH.

COPYRIGHT © 2024
Short Elliott Hendrickson Inc.
All Rights Reserved

SEH Project	SEWAC 163917
Checked By	NRD/SMJ
Drawn By	PAM

Project Status	**Issue Date**
CLIENT REVIEW	02/13/2026

REVISION SCHEDULE

REV. #	DESCRIPTION	DATE

GENERAL STRUCTURAL NOTES

S002

THIS BAR IS INTENDED TO BE 1" PRINTED AT FULL SCALE 2/11/2026 3:46:01 PM

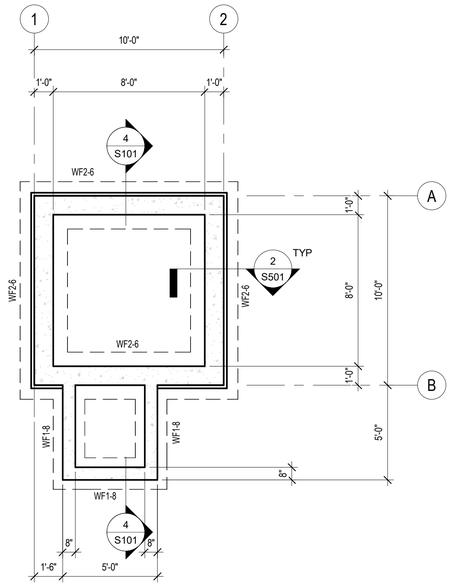

1 S101 FOUNDATION PLAN
1/4" = 1'-0"
0 2' 4' 8'
PROJECT NORTH

FOUNDATION PLAN GENERAL NOTES:

(TYPICAL UNLESS NOTED OTHERWISE)

1. TFE = 1451.50' UNO. STEP FOOTINGS AS NECESSARY BELOW UTILITIES AND TO MAINTAIN MINIMUM FROST DEPTH. SEE DETAIL 6/S501.
2. VERIFY ALL DIMENSIONS AND CONDITIONS WITH PROCESS DRAWINGS.
3. VERIFY ALL SIZES, LOCATIONS, AND ELEVATIONS OF OPENINGS WITH MECH, ELEC AND PROCESS DRAWINGS. REINF AS NECESSARY PER DETAIL 5/S501.
4. FOR TYPICAL STOOP DETAIL, SEE 3/S501.
5. FOR TYPICAL CONCRETE WALL CORNER AND INTERSECTION REINFORCING, SEE 4/S501.

FOOTING SCHEDULE

MARK	SIZE	REINFORCING
WF1-8	1'-8" WIDE x 1'-0" DEEP x CONTINUOUS	(2) #5 REBAR CONTINUOUS, BOTTOM
WF2-6	2'-6" WIDE x 1'-0" DEEP x CONTINUOUS	(3) #5 REBAR CONTINUOUS, BOTTOM

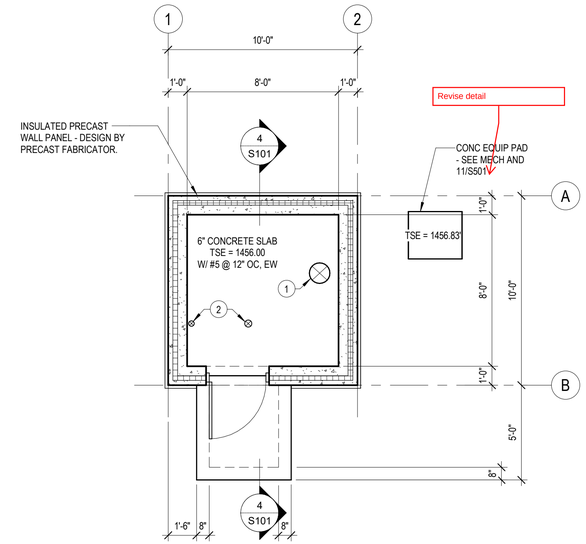

2 S101 LEVEL 1 PLAN
1/4" = 1'-0"
0 2' 4' 8'
PROJECT NORTH

PLAN GENERAL NOTES:

(TYPICAL UNLESS NOTED OTHERWISE)

1. VERIFY ALL DIMENSIONS AND CONDITIONS WITH PROCESS DRAWINGS.
2. VERIFY ALL SIZES AND LOCATIONS OF OPENINGS WITH MECH, ELEC AND PROCESS DRAWINGS. REINF AS NECESSARY PER DETAIL 5/S501.

PLAN KEYNOTES:

1. PENETRATION - SEE PROCESS
2. FLOOR DRAIN AND VENT PENETRATIONS - SEE MECHANICAL

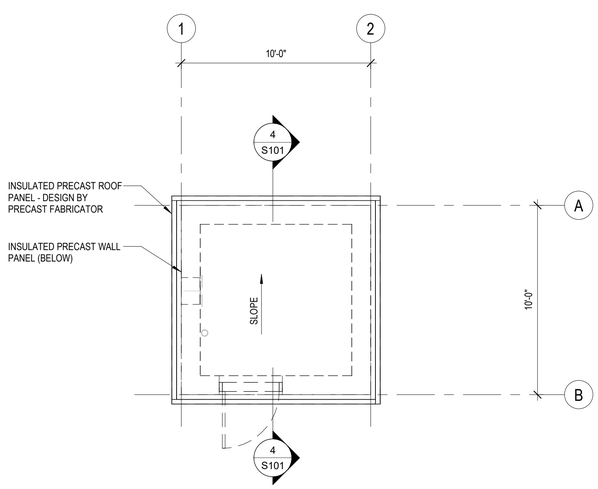

3 S101 ROOF FRAMING PLAN
1/4" = 1'-0"
0 2' 4' 8'
PROJECT NORTH

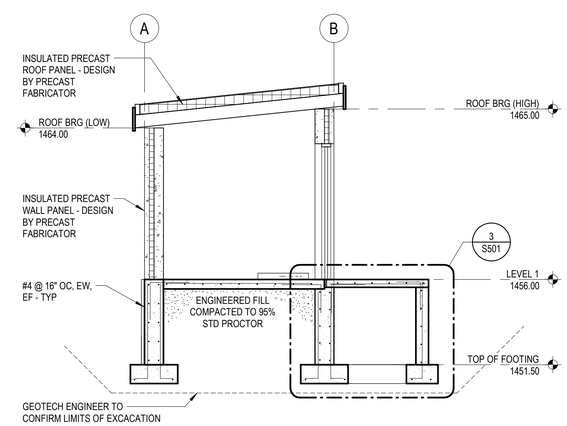

NOTE:
1. SEE NOTE 11 IN GENERAL STRUCTURAL NOTES FOR ADDITIONAL SOIL REQUIREMENTS.

4 S101 SECTION
1/4" = 1'-0"
0 2' 4' 8'

THIS BAR IS INTENDED TO BE 1" PRINTED AT FULL SCALE 2/11/2026 3:46:01 PM

SEH

NOT FOR CONSTRUCTION

Project Owner
SEWARD NEBRASKA

SEWARD, NEBRASKA
METERING MANHOLE AND SAMPLING BUILDING
2846-2886 Walker Road
Seward, NE 68434

This drawing is an instrument of service and shall remain the property of Short Elliott Hendrickson, Inc. (SEH). This drawing, concepts and ideas contained herein shall not be used, reproduced, revised, or retained without the express written approval of SEH.

Submission or distribution of this drawing to meet official or regulatory requirements or for purposes in connection with the project is not to be construed as publication in derogation of any of the rights of SEH.

COPYRIGHT © 2024
Short Elliott Hendrickson, Inc.
All Rights Reserved

SEH Project	SEWAC 163917
Checked By	NRD/SMJ
Drawn By	PAM

Project Status	**Issue Date**
CLIENT REVIEW	02/13/2026

REVISION SCHEDULE

REV. #	DESCRIPTION	DATE

FOUNDATION AND LEVEL 1 PLANS

S101

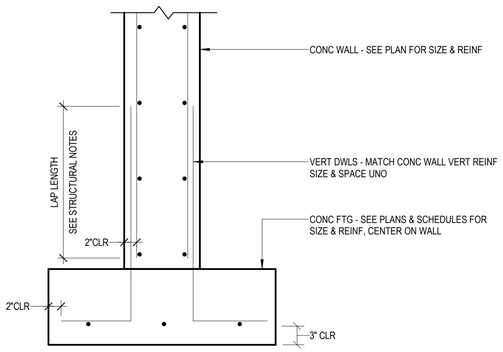

1 S501 STRIP FOOTING DETAIL
NOT TO SCALE

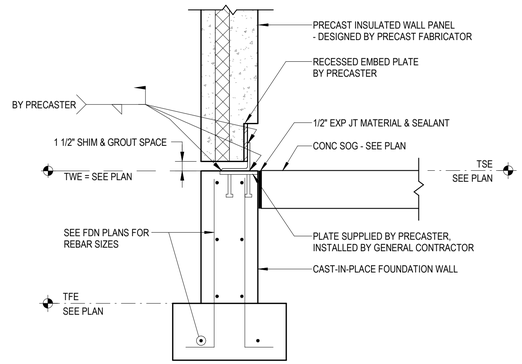

NOTES:
1. CONNECTION DESIGN AND COMPONENT SIZES BY PRECASTER.
2. ALL CONNECTION COMPONENTS SHALL BE STAINLESS STEEL.
3. PATCH ALL RECESSES IN FINAL CONDITION.

2 S501 FOUNDATION WALL SECTION
NOT TO SCALE

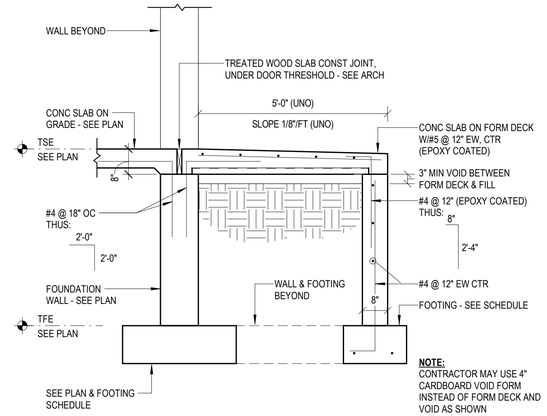

NOTE:
CONTRACTOR MAY USE 4" CARDBOARD VOID FORM INSTEAD OF FORM DECK AND VOID AS SHOWN

3 S501 CONCRETE STOOP DETAIL
NOT TO SCALE

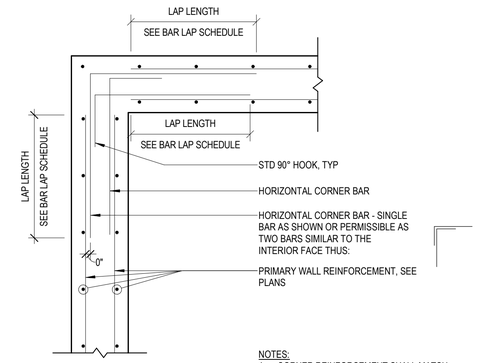

NOTES:
1. CORNER REINFORCEMENT SHALL MATCH PRIMARY REINFORCEMENT SIZE & SPACING, UNO.
2. REINFORCEMENT IS SYMMETRICAL.

4 S501 WALL CORNER REINFORCEMENT DETAIL
NOT TO SCALE

NOTES:
1. IF OPENING DIMENSION OR DIAMETER IS GREATER THAN 3'-0", REFER TO SPECIFIC DETAIL.
2. BAR OR BARS OF SAME SIZE AND COATING AS BARS CUT, W/(1/2) THE NUMBER OF CUT BARS EACH SIDE OF OPENING, SPACED @ 4". IF ONLY ONE BAR, OR NO BARS (PER MAT) ARE CUT IN EITHER DIRECTION USE ONLY DIAGONAL BARS.
3. PROVIDE LAP LENGTH. SEE TABLE IN STRUCTURAL NOTES.
4. SINGLE DIAGONAL BAR EACH FACE, SAME SIZE AND COATING AS BIGGEST BAR CUT, IF NO BARS CUT USE MINIMUM #5 x 5'-0".
5. IF REINF IS WWF, OR THERE IS NO REINF, PROVIDE (4) #5 x 5'-0" DIAGONAL BARS.

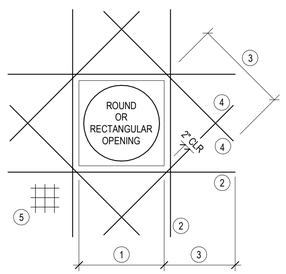

5 S501 OPENING REINFORCEMENT DETAIL
NOT TO SCALE

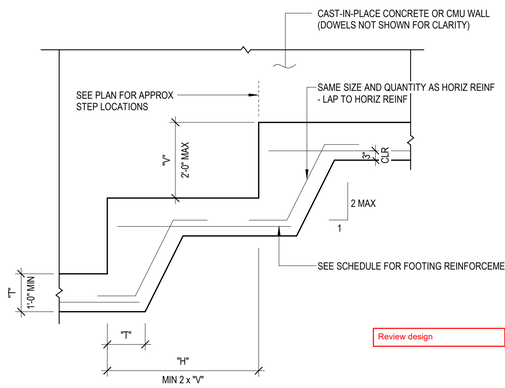

Review design

6 S501 FOOTING STEP DETAIL
NOT TO SCALE

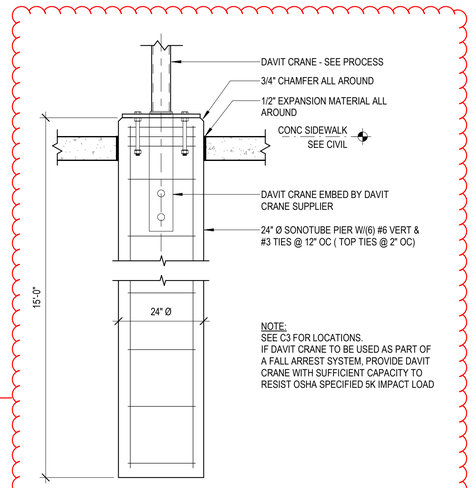

NOTE:
SEE C3 FOR LOCATIONS.
IF DAVIT CRANE TO BE USED AS PART OF A FALL ARREST SYSTEM, PROVIDE DAVIT CRANE WITH SUFFICIENT CAPACITY TO RESIST OSHA SPECIFIED 5K IMPACT LOAD

7 S501 DAVIT CRANE FOUNDATION
NOT TO SCALE

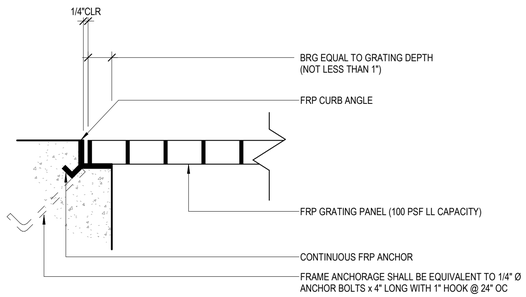

NOTE:
SEE C3 FOR LOCATIONS

8 S501 FRP GRATING & FRAME
NOT TO SCALE

Review detail. Include 4" equ. pad detail for interior equ.

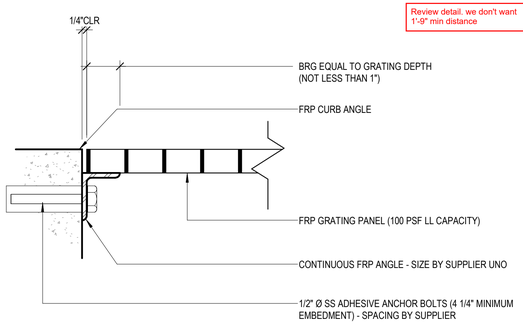

NOTE:
SEE C3 FOR LOCATIONS

9 S501 FRP GRATING & FRAME 2
NOT TO SCALE

Review detail. we don't want 1'-9" min distance

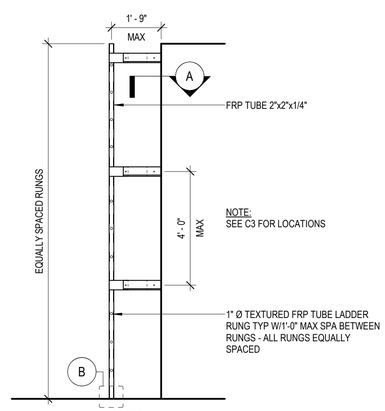

NOTE:
SEE C3 FOR LOCATIONS

1" Ø TEXTURED FRP TUBE LADDER RUNG TYP W/1'-0" MAX SPA BETWEEN RUNGS - ALL RUNGS EQUALLY SPACED

SECTION

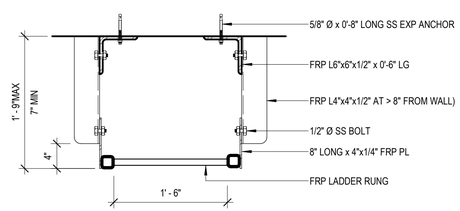

DETAIL A

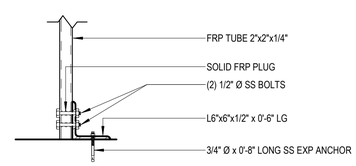

DETAIL B

10 S501 FRP LADDER DETAIL
NOT TO SCALE

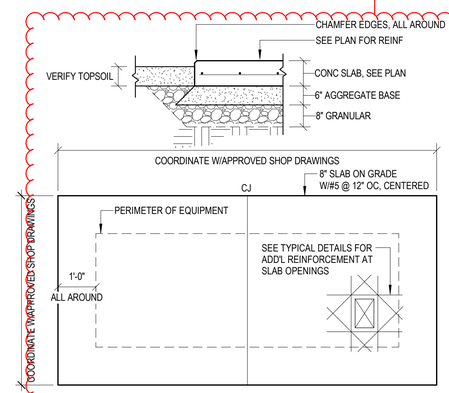

NOTES:
1. PROVIDE SLAB CONTROL JOINT (CJ) IF SLAB LENGTH EXCEEDS 20 FT OR 1.5 L: 1 W RATIO
2. COORDINATE SLAB LOCATION AND ORIENTATION WITH CIVIL.
3. REFER TO ELECTRICAL, MECHANICAL, & PROCESS PLANS & SPECIFICATIONS FOR ADD'L NOTES & DETAILS.
4. CONTRACTOR SHALL VERIFY DIMENSIONS AND ALL OVER ALL REQUIREMENTS.
5. ONLY USE WHERE SPECIFICALLY INDICATED. USE 12" EXTERIOR EQUIPMENT SLAB DETAIL TYPICALLY.

11 S501 STATIC EXTERIOR EQUIPMENT SLAB DETAIL
NOT TO SCALE

THIS BAR IS INTENDED TO BE 1" PRINTED AT FULL SCALE 2/11/2026 3:46:02 PM

SEH

NOT FOR CONSTRUCTION

Project Owner
SEWARD NEBRASKA

SEWARD, NEBRASKA
METERING MANHOLE AND SAMPLING BUILDING
2846-2886 Walker Road
Seward, NE 68434

This drawing is an instrument of service and shall remain the property of Short Elliott Hendrickson, Inc (SEH). The drawing, concepts and ideas contained herein shall not be used, reproduced, revised, or retained without the express written approval of SEH.

Submission or distribution of this drawing to meet official or regulatory requirements or for purposes in connection with the project is not to be construed as publication in derogation of any of the rights of SEH.

COPYRIGHT © 2024
Short Elliott Hendrickson, Inc.
All Rights Reserved

SEH Project	SEWAC 163917
Checked By	NRD/SMJ
Drawn By	PAM
Project Status	**Issue Date**
CLIENT REVIEW	02/13/2026

REVISION SCHEDULE

REV. #	DESCRIPTION	DATE

CONCRETE DETAILS

S501

OCCUPANCY LEGEND

F-1

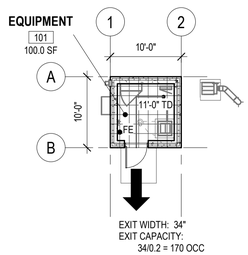

1 / A001 CODE PLAN - GRADE LEVEL

3/32" = 1'-0"

0 8' 16' 24'

PROJECT NORTH

CODE PLAN KEY

#'-#" TD — TRAVEL DISTANCE (TD)

EXIT LOCATION
MAX. OCCUPANCY LOAD

FE — FIRE EXTINGUISHER - VERIFY FINAL LOCATION WITH AUTHORITY HAVING JURISDICTION

OCCUPANCY SCHEDULE - GROSS

NO.	ROOM NAME	AREA	OCCUPANCY	GROSS FACTOR	OCC. LOAD	NOTES
101	EQUIPMENT	100.0 SF	F-1	300	1.0	
TOTAL		100.0 SF			1.0	

Referenced Codes

- 2018 State Building Code – Nebraska
- 2018 International Building Code (IBC)
- 2018 International Existing Building Code (IEBC)
- 2018 International Mechanical Code (IMC)
- 2018 International Fuel and Gas Code (IFGC)
- 2018 International Energy Conservation Code (IECC)
- 2010 ADAAG / ANSI A117.1
- 2018 National Electrical Code (NEC)
- 2018 NFPA 70
- 2018 Nebraska Plumbing Code
- 2018 Uniform Plumbing Code (UPC)
- 2019 Nebraska Fire Code
- 2019 NFPA 1

COMMENTARY

The new remote sampling building will be used to house equipment to monitor the outgoing waste stream flow from the new dairy industry, before it is sent to the City's main wastewater treatment plant. The new building will be a single room, located on grade, adjacent to an underground manhole. The building will be of non-combustible materials, and will be unoccupied during the normal course of operation.

1.01 IBC CHAPTER 3 - OCCUPANCY TYPE

A. Occupancy Type F-1 – Moderate Hazard Factory Industrial (Reference IBC 306).

1.02 IBC CHAPTER 4 - SPECIAL PROVISIONS BASED ON USE AND OCCUPANCY

A. Not Applicable.

1.03 IBC CHAPTER 5 - BUILDING AREA

A. Construction Type: II-B, Non-Sprinkled, Single-Use Occupancy, Single-Story building is of non-combustible construction materials (Reference IBC Tables 504.3 and 504.4)

B. Allowable Area Determination
1. Permitted Area/Floor (Reference IBC Table 504.4 and 506.2): 15,500 sf / 2 Stories above grade
2. Permitted Building Height: 55 feet (Reference IBC Table 504.3)
3. Frontage Increase (Reference IBC 506.3.3): Not Required
4. Actual Building Area: 100 sf
5. Actual Building Height: 10.5 feet
6. Actual Building Stories: 1

C. Mezzanines (Reference IBC 505.2)
1. Not Applicable.

D. Equipment Platforms (Reference IBC 505.3)
1. Not Applicable

E. Accessory Occupancies (Reference IBC 508.2)
1. Not Applicable

F. Incidental Use (Reference IBC 509)
1. Not Applicable

1.04 IBC CHAPTER 6 - TYPE OF CONSTRUCTION

A. Fire Resistive Requirements: Type II-B Building.
1. Reference IBC Table 601, Table 602.
Notes:
1.) Fire separation distance (X) from table 602 when measured in accordance with IBC 705.3. Measurement from face of building to lot line, imaginary lot line or centerline of street per IBC 705.3.

B. Combustible construction in Type II Buildings (Reference IBC 603)
1. Thermal insulation having a flame spread of not more than 100.
2. Foam plastics in accordance with IBC Chapter 26.

1.05 IBC CHAPTER 7 - FIRE AND SMOKE PROTECTION

A. Exterior Walls
1. Buildings on the same lot: For the purposes of determining the required wall and opening protection, projections and roof covering requirements, buildings on the same lot shall be assumed to have an imaginary lot line be placed between them. (Reference IBC 705.3)
a. Fire Separation Distance is greater than 30 feet on all sides of the building.
2. Openings (Reference IBC Table 705.8)
a. Openings in exterior walls with Fire Separation Distance greater than 30 feet (all exterior walls) that are Unprotected, Non-Sprinklered (UP,NS) shall have no limits on allowable area
b. Not Applicable.
3. Parapets: Building is not required to have a parapet in accordance with IBC 705.11, Exception #1

B. Fire Walls (Reference IBC 706)
1. Not Applicable

C. Fire Barriers (Reference IBC 707)
1. Not Applicable

1.06 IBC CHAPTER 8 - INTERIOR FINISHES

A. Allowable Finishes - F-1 Occupancy
1. Wall and Ceiling Finishes, Non-Sprinklered Building (Reference IBC Table 803.11).
a. Exit Enclosures and Passageways - Class B per ASTM E84 (Not Applicable).
b. Corridors - Class C per ASTM E84 (Not Applicable).
c. Enclosed Rooms or Spaces - Class C per ASTM E84.

1.04 IBC CHAPTER 9 - FIRE PROTECTION SYSTEMS

A. Automatic Fire Sprinkler Systems (Reference IBC 903)
1. Automatic Fire Sprinkler System requirements:
a. F-1 Occupancy - Automatic Fire Sprinkler System is not required (Reference IBC 903.2.4).
2. Standpipe Systems (Reference IBC 905).
a. Not Applicable.
3. Portable Fire Extinguishers - Moderate Hazard (Reference IBC Table 906.3.1).
a. Class A Fires:
1) Maximum 1,500 square feet per unit of A.
2) Maximum Floor area per extinguisher: 11,250 square feet.
3) Maximum Travel Distance: 75 feet.
4) Minimum single rated unit: 2-A.

B. Fire Alarm and Detection
1. F-1 Occupancy - Not required (Reference IBC 907.2.4).

1.08 IBC CHAPTER 10 - MEANS OF EGRESS

A. Occupant Loads (Reference IBC Table 1004.1.2 Max Floor Area Allowances per Occupant)
1. Total Building Occupant Load: 1 Occupant
a. Factory/Industrial: 1 Occupant (Based on 300 sf/Occ)

B. Egress Distance/Width
1. Travel Distance (Reference IBC Table 1017.2).
a. F-1 Occupancy: 200 feet without Automatic Fire Sprinkler System.
b. Travel distance measured from most remote location on a level to exit discharge on grade.
2. Common Path of Egress Travel (Reference IBC Table 1006.2.1).
a. F-1 Occupancy: 75 feet without Automatic Fire Sprinkler System and an Occupant Load of 30 or less (Reference IBC Table 1006.2.1).
3. Egress Width (Reference IBC 1005.3).
a. Minimum width of egress components shall be determined by multiplying the occupant load by 0.2 for all components.

C. Accessible Means of Egress (Reference IBC 1009.1)
1. The building is not regularly occupied and is only used to maintain mechanical equipment and is not required to be accessible (Reference IBC 1103.2.9).

D. Doors
1. Width: Clear width of egress doors shall be a minimum of 32 inches (Reference IBC 1010.1.1).
2. Landings: There shall be a floor or landing on each side of a door. Floors shall have a width not less than the width of the door, and a length measured in the direction of travel of not less than 44 inches. Doors in the fully open position shall not reduce the required dimension by more than 7 inches (Reference IBC 1010.1.5 and 1010.1.6).

E. Stairs (Reference IBC 1011)
1. Not Applicable.

F. Exit Doorways
1. Minimum quantity of exits per Story (Reference IBC Table 1006.3.2(2)).
a. F-1 Occupancy: Each Story shall have a minimum of one independent exit based on Occupant Load of 49 or less and a maximum common path of egress travel distance of 75 feet.
2. Minimum quantity of Exits per Occupant Load (Reference IBC Table 1006.2.1).
a. F-1 Occupancy: Rooms with Occupant Load of 30 or less and maximum common path of egress travel of 75 feet: 1 Exit.

G. Corridors (Reference IBC 1020)
1. Not Applicable.

1.09 IBC CHAPTER 11 - ACCESSIBILITY

A. The building is not regularly occupied and is only used to maintain mechanical equipment and is not required to be accessible (Reference IBC 1103.2.9).

1.10 IBC CHAPTER 29 - PLUMBING SYSTEMS

A. The State of Nebraska has amended the IBC to disregard Chapter 29 for Plumbing System requirements. The 2018 Uniform Plumbing Code has been adopted for direction and requirements.
B. There is no water or sanitary sewer service intended to serve the new building. The building is not regularly occupied and is only used to maintain mechanical equipment. With the remote location of this structure and the fact that there are no other City-Owned structures on the site, there are no plans to include any plumbing fixtures that are listed in Table 422.1 of the UPC.

THIS BAR IS INTENDED TO BE 1" PRINTED AT FULL SCALE 2/11/2026 2:19:52 PM

SEH
COA: CA-2111

NOT FOR CONSTRUCTION

Project Owner
SEWARD NEBRASKA

SEWARD, NE
METERING MANHOLE AND SAMPLING BUILDING
2846-2886 WALKER ROAD
SEWARD, NE 68434

This drawing is an instrument of service and shall remain the property of Short Elliott Hendrickson, Inc. (SEH). This drawing, concepts and ideas contained herein shall not be used, reproduced, revised, or retained without the express written approval of SEH.

Submission or distribution of this drawing to meet official or regulatory requirements or for purposes in connection with the project is not to be construed as publication in derogation of any of the rights of SEH.

COPYRIGHT © 2024
Short Elliott Hendrickson, Inc.
All Rights Reserved

SEH Project	SEWAC 163917
Checked By	TDS
Drawn By	TDS

Project Status	**Issue Date**
CLIENT REVIEW	02/13/2026

REVISION SCHEDULE

REV. #	DESCRIPTION	DATE

CODE PLAN AND INFORMATION

A001

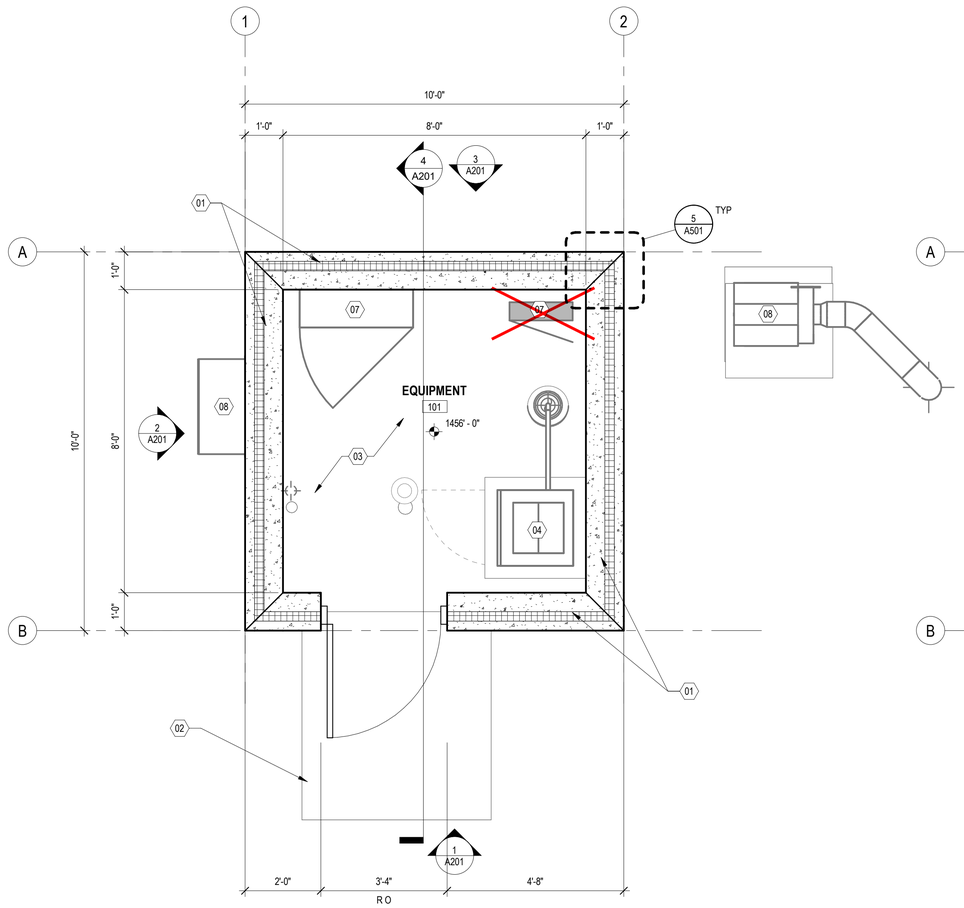

1 A101 FLOOR PLAN - GRADE LEVEL
1/2" = 1'-0"
0 1' 2' 4'

PROJECT NORTH

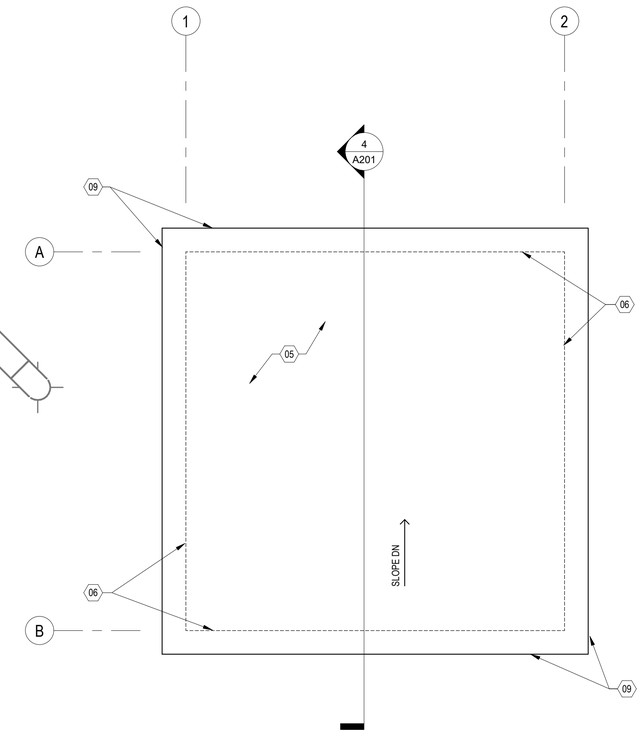

2 A101 ROOF PLAN
1/2" = 1'-0"
0 6" 1' 2'

PROJECT NORTH

GENERAL NOTES:

A- SEE ROOM FINISH SCHEDULE FOR CEILING, WALL AND FLOOR COATINGS.

B- ALL DIMENSIONS ARE TO FACE OF WALL OR EDGE OF OPENING UNLESS NOTED OTHERWISE.

C- ALL PENETRATIONS THROUGH THE EXTERIOR WALLS SHALL BE SEALED WEATHERTIGHT.

PLAN KEYNOTES:

01- INSULATED PRECAST CONCRETE WALL PANEL

02- CONCRETE STOOP- SEE STRUCTURAL

03- CONCRETE FLOOR SLAB ON GRADE- SEE STRUCTURAL

04- EQUIPMENT- SEE PROCESS

05- FULLY ADHERED FLEECEBACKED EPDM ROOF MEMBRANE (WHITE IN COLOR) OVER 1/2" COVER BOARD, 6" RIGID INSULATION, AND VAPOR BARRIER ROOFING ASSEMBLY, ON PRECAST CONCRETE ROOF PLANK

06- DASHED LINE INDICATES FACE OF BUILDING WALL BELOW

07- EQUIPMENT- SEE ELECTRICAL

08- EQUIPMENT- SEE MECHANICAL

09- PREFINISHED METAL ROOF EDGE

NOTE:
REFER TO SPECIFICATION SECTION 09 97 20 FOR COATING SYSTEMS INFORMATION

ROOM FINISH SCHEDULE

ROOM NUMBER	ROOM NAME	FLOOR	BASE	WALL FINISH				CEILINGS		REMARKS	REV #
				NORTH	SOUTH	EAST	WEST	FINISH	MATERIAL		
101	EQUIPMENT	SC	-	PT	PT	PT	PT	PT	PCP	-	

ABBREVIATIONS:

SC= SEALED CONCRETE
PT= PAINT
PCP= PRECAST CONCRETE PLANK

REMARKS LEGEND:

NONE

DOOR SCHEDULE

DOOR	DOOR					FRAME			HARDWARE GROUP	DETAILS		REMARKS	REV #
NUMBER	WIDTH	HEIGHT	MATERIAL	TYPE	GLASS TYPE	MATERIAL	TYPE	FIRE RATING		HEAD DETAIL	JAMB DETAIL		
101.2	3' - 0"	7' - 0"	FRP	F	-	FRP	F1	-	01	4/A501	4/A501 SIM	1	

ABBREVIATIONS:

FRP= FIBER REINFORCED PLASTIC

REMARKS LEGEND:

1. INSULATED EXTERIOR DOOR LEAF- FILL FRAME WITH FOAM INSULATION

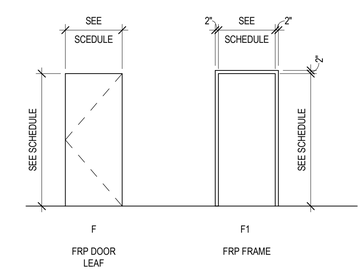

3 A101 DOOR AND FRAME TYPES
1/4" = 1'-0"
0 6" 1' 2'

THIS BAR IS INTENDED TO BE 1" PRINTED AT FULL SCALE 2/11/2026 2:19:52 PM

SEH
COA: CA-2111

NOT FOR CONSTRUCTION

Project Owner
SEWARD NEBRASKA

SEWARD, NE
METERING MANHOLE AND SAMPLING BUILDING
2846-2886 WALKER ROAD
SEWARD, NE 68434

This drawing is an instrument of service and shall remain the property of Short Elliott Hendrickson, Inc. (SEH). This drawing, concepts and ideas contained herein shall not be used, reproduced, revised, or retained without the express written approval of SEH.

Submission or distribution of this drawing to meet official or regulatory requirements or for purposes in connection with the project is not to be construed as publication in derogation of any of the rights of SEH.

COPYRIGHT © 2024
Short Elliott Hendrickson, Inc.
All Rights Reserved

SEH Project	SEWAC 163917
Checked By	TDS
Drawn By	TDS

Project Status	**Issue Date**
CLIENT REVIEW	02/13/2026

REVISION SCHEDULE

REV. #	DESCRIPTION	DATE

FLOOR AND ROOF PLANS, SCHEDULES, DETAILS

A101

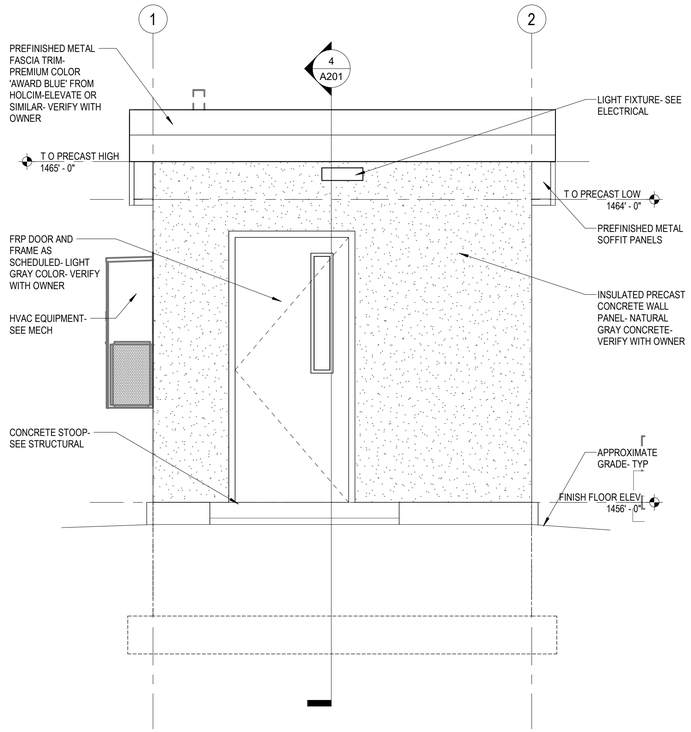

1 A201 EXTERIOR ELEVATION - SOUTH
1/2" = 1'-0"
0 2' 4' 8'

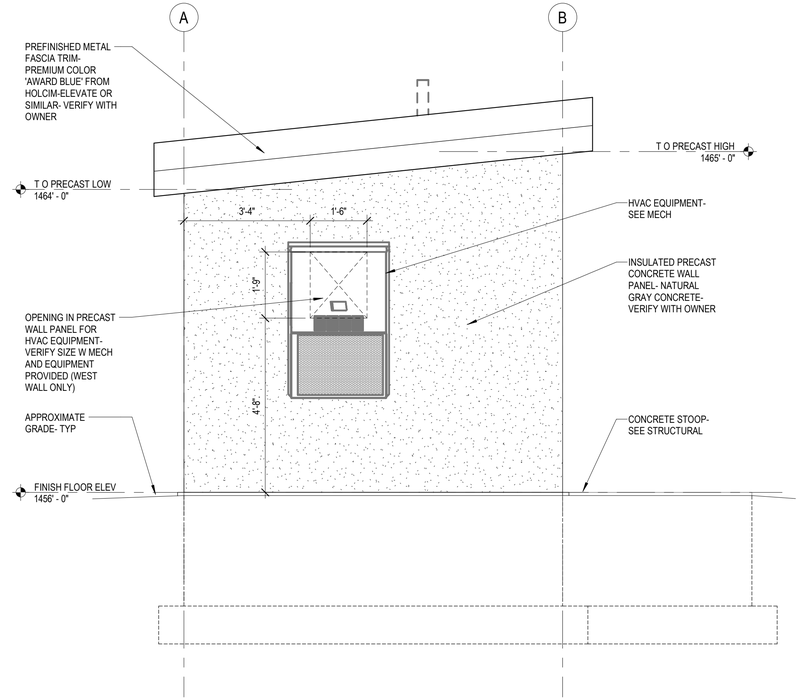

2 A201 EXTERIOR ELEVATION - WEST
1/2" = 1'-0"
0 6" 1' 2'
(EAST SIDE MIRRORED)

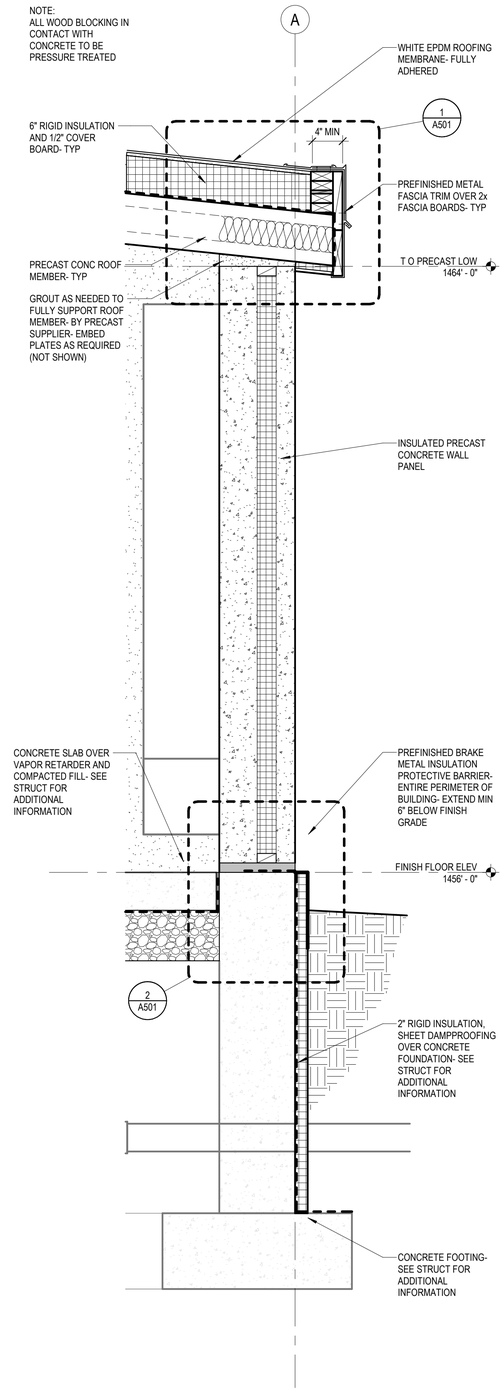

5 A201 TYPICAL EXTERIOR WALL SECTION
1" = 1'-0"
0 1' 2' 4'

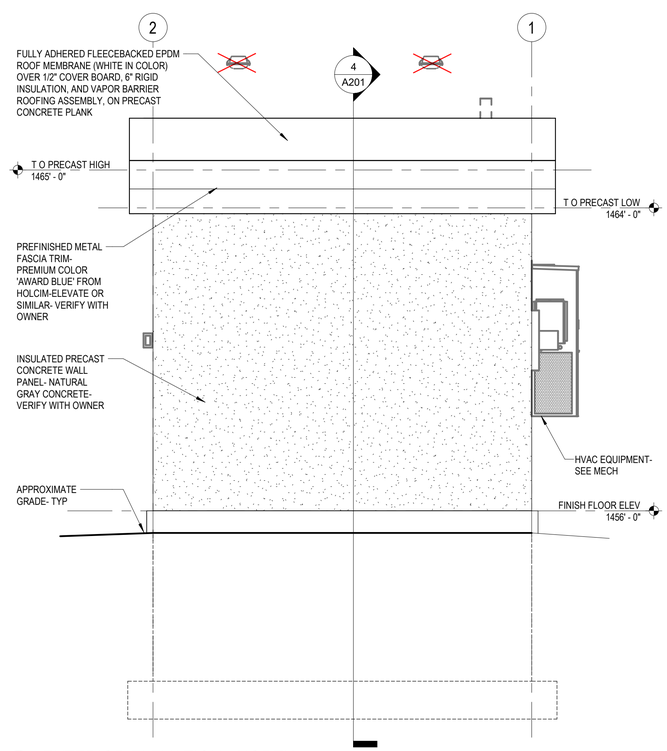

3 A201 EXTERIOR ELEVATION - NORTH
1/2" = 1'-0"
0 2' 4' 8'

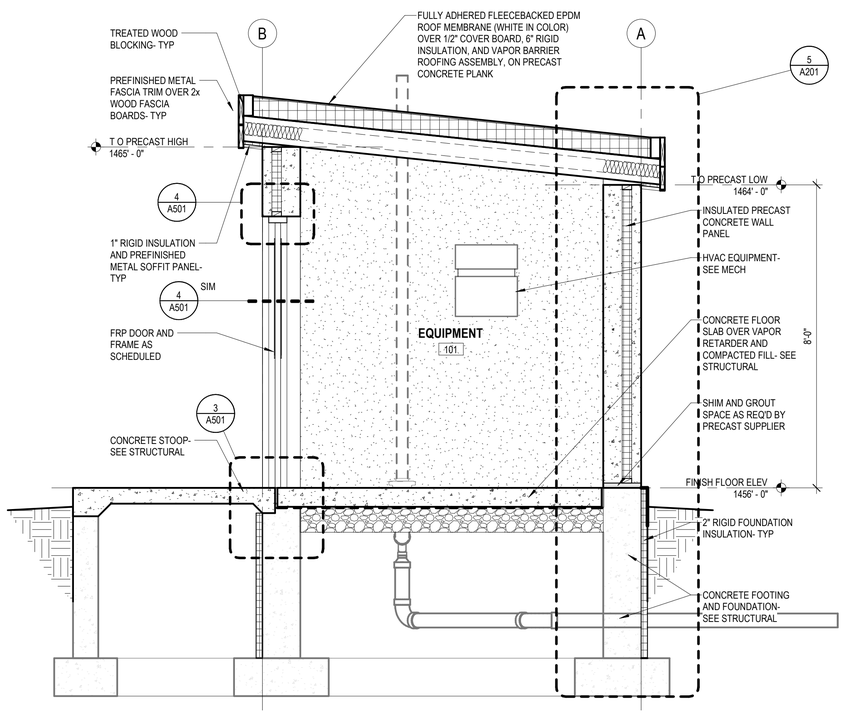

4 A201 NORTH / SOUTH BUILDING SECTION
1/2" = 1'-0"
0 2' 4' 8'

THIS BAR IS INTENDED TO BE 1" PRINTED AT FULL SCALE 2/11/2026 2:19:53 PM

SEH
COA: CA-2111

NOT FOR CONSTRUCTION

Project Owner
SEWARD NEBRASKA

SEWARD, NE
METERING MANHOLE AND SAMPLING BUILDING
2846-2886 WALKER ROAD
SEWARD, NE 68434

This drawing is an instrument of service and shall remain the property of Short Elliott Hendrickson, Inc (SEH). This drawing, concepts and ideas contained herein shall not be used, reproduced, revised, or retained without the express written approval of SEH.

Submission or distribution of this drawing to meet official or regulatory requirements or for purposes in connection with the project is not to be construed as publication in derogation of any of the rights of SEH.

COPYRIGHT © 2024
Short Elliott Hendrickson, Inc.
All Rights Reserved

SEH Project	SEWAC 163917
Checked By	TDS
Drawn By	TDS

Project Status	**Issue Date**
CLIENT REVIEW	02/13/2026

REVISION SCHEDULE

REV. #	DESCRIPTION	DATE

EXTERIOR ELEVATIONS, SECTIONS

A201

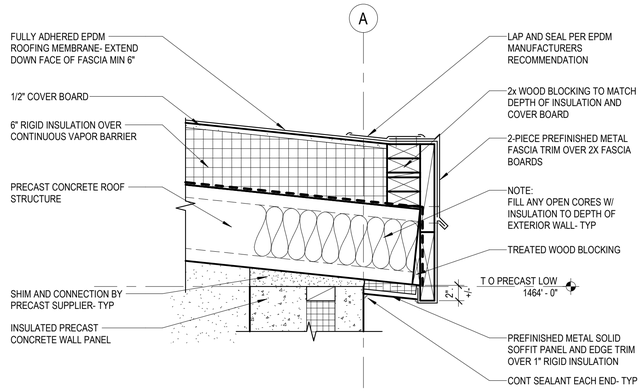

1 A501 DETAIL - TYPICAL ROOF EDGE AND FASCIA

1 1/2" = 1'-0"

0 6" 1' 2'

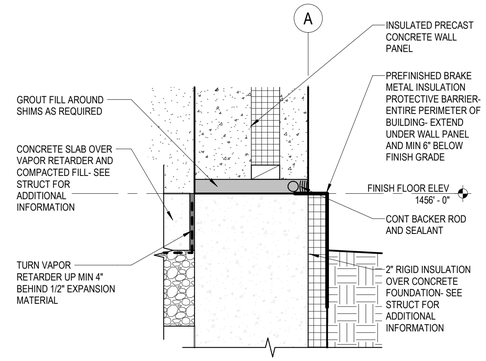

2 A501 DETAIL - TYPICAL BASE OF PRECAST WALL

1 1/2" = 1'-0"

0 6" 1' 2'

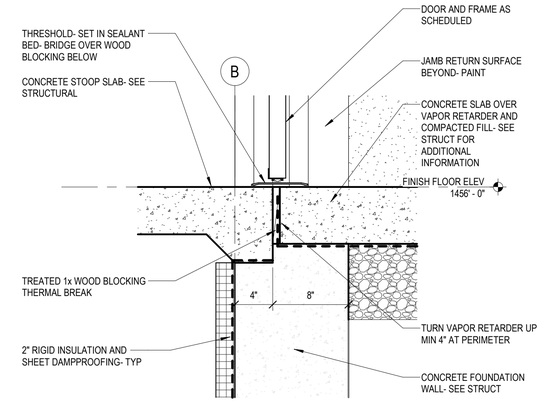

3 A501 DETAIL - STOOP TO FLOOR TRANSITION

1 1/2" = 1'-0"

0 6" 1' 2'

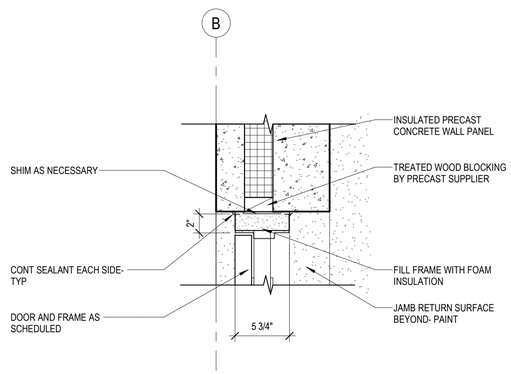

4 A501 DETAIL - DOOR OPENING HEAD

1 1/2" = 1'-0"

JAMB CONDITION SIMILAR

0 6" 1' 2'

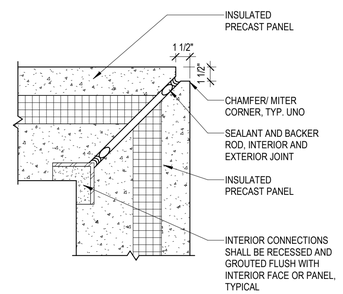

5 A501 DETAIL - PRECAST CORNER JOINT

1 1/2" = 1'-0"

0 6" 1' 2'

THIS BAR IS INTENDED TO BE 1" PRINTED AT FULL SCALE 2/11/2026 2:19:53 PM

SEH

COA: CA-2111

NOT FOR CONSTRUCTION

Project Owner

SEWARD NEBRASKA

SEWARD, NE
METERING MANHOLE AND SAMPLING BUILDING

2846-2886 WALKER ROAD
SEWARD, NE 68434

This drawing is an instrument of service and shall remain the property of Short Elliott Hendrickson, Inc. (SEH). This drawing, concepts and ideas contained herein shall not be used, reproduced, revised, or retained without the express written approval of SEH.

Submission or distribution of this drawing to meet official or regulatory requirements or for purposes in connection with the project is not to be construed as publication in derogation of any of the rights of SEH.

COPYRIGHT © 2024
Short Elliott Hendrickson, Inc.
All Rights Reserved

SEH Project	SEWAC 163917
Checked By	TDS
Drawn By	TDS

Project Status	**Issue Date**
CLIENT REVIEW	02/13/2026

REVISION SCHEDULE

REV. #	DESCRIPTION	DATE

CONSTRUCTION DETAILS

A501

DRAWING SYMBOLS

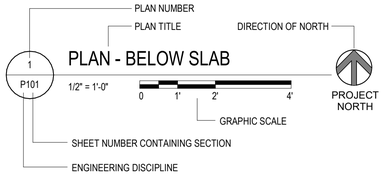

DRAWING TITLE

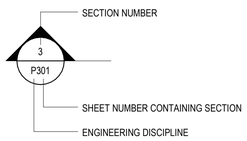

SECTION "CUT" SYMBOL

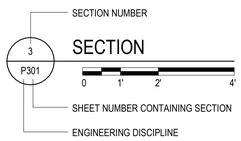

SECTION TITLE

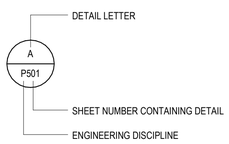

DETAIL INDICATOR

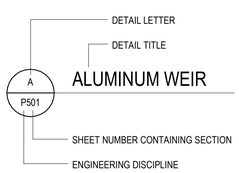

DETAIL TITLE

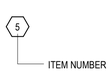

KEYNOTE INDICATOR

SPOT ELEVATION

ABBREVIATION LIST

AF	ADAPTER FLANGE	MECH	MECHANICAL
AL/ALUM	ALUMINUM	MFRS	MANUFACTURERS
APPROX	APPROXIMATELY	MIN	MINIMUM
BF	BLIND FLANGE	MV	MUD VALVE
BFV	BUTTERFLY VALVE	N	NORTH
BLDG	BUILDING	N/A	NOT APPLICABLE
BLV	BALL VALVE	NOM	NOMINAL
BF	BLIND FLANGE	NO	NUMBER
BLK	BLOCK	NPW	NON-POTABLE WATER
BOT	BOTTOM	NTS	NOT TO SCALE
CHL	CHLORINE	OC	ON CENTER
CI	CAST IRON	OPNG	OPENING
CKD	CHECKERED	P	PLUG
CL	CENTERLINE	PC	PIPE COUPLING
CMU	CONCRETE MASONRY UNIT	PPC	PRESTRESSED PRECAST CONCRETE
CO	CLEAN-OUT	PR	PRESSURE REDUCER
CONC	CONCRETE	PRV	PRESSURE RELIEF VALVE
CONT	CONTINUOUS	PNT	PAINT
CTE	CONNECT TO EXISTING	PV	PLUG VALVE
CJ	CONTROL JOINT	PV & B	PLUG VALVE & BOX
CPE	CORRUGATED POLYETHYLENE	PVC	POLYVINYL CHLORINE
CV	CHECK VALVE	PW	PLANT WATER
DIP	DUCTILE IRON PIPE	R, RAD	RADIUS
E	EAST	RD	ROOF DRAIN
EL	ELEVATION	RAS	RETURN ACTIVATED SLUDGE
EQUIP	EQUIPMENT	RCP	REINFORCED CONCRETE PIPE
EX	EXISTING	RECIRC	RECIRCULATION
FD	FLOOR DRAIN	REINF	REINFORCE(D)
FFE	FINISHED FLOOR ELEVATION	SEC	SECTION
FM	FORCEMAIN	SHT	SHEET
FRP	FIBERGLASS REINFORCED	SF	SQUARE FOOT / SQUARE FEET
FTG	FITTING/FOOTING	SP	SLIDE PLATE
GV	GATE VALVE	SO	SIDE OUTLET
GV & B	GATE VALVE & BOX	SS	STAINLESS STEEL
H	HIGH	SQ	SQUARE
HWL	HIGH WATER LEVEL	TH	THICK
ID	INSIDE DIAMETER	TK	TANK
INS	INSIDE	TOW	TOP OF WEIR
INV	INVERT	TYP	TYPICAL
JT	JOINT	UON	UNLESS OTHERWISE NOTED
L	LONG	W	WIDE
LL	LIQUID LEVEL	WAS	WASTE ACTIVATED SLUDGE
LT	LEFT	WL	WATER LEVEL
M	METER	WSE	WATER SURFACE LEVEL
MAX	MAXIMUM		

PROCESS PIPE LEGEND

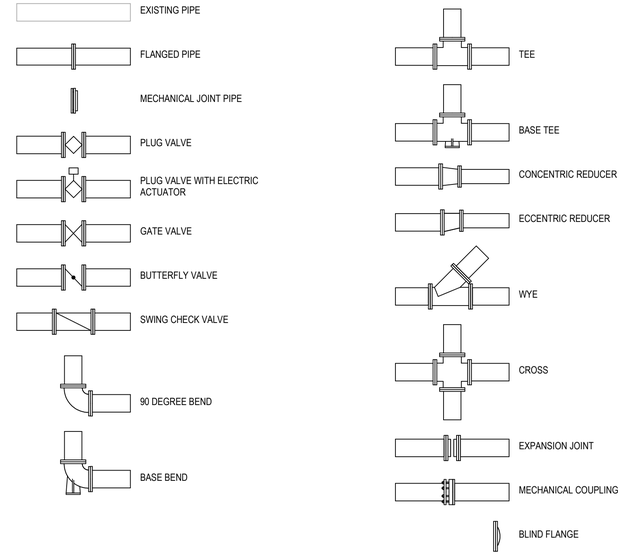

GENERAL CONSTRUCTION LEGEND

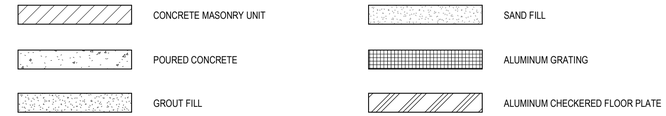

GENERAL NOTES

1. SEE STRUCTURAL PLANS FOR ROOF, SLAB, WALL, FOUNDATION, BEAM AND REINFORCING STEEL INFORMATION AND CONCRETE DIMENSIONS.
2. ALUMINUM SURFACES IN CONTACT WITH CONCRETE SHALL RECEIVE 8-12 MIL DRY FILM THICKNESS OF BITUMASTIC.
3. ALL ANCHOR BOLTS, NUTS FASTENERS, ETC. SHALL BE 304 STAINLESS STEEL, UNLESS OTHERWISE NOTED.
4. ALTHOUGH NOT SPECIFICALLY NOTED ON THE PLANS, CONTRACTOR SHALL INSTALL PIPING USING SUPPORTS, PIPE COUPLINGS AND ANY OTHER PIPING APPURTENANCES REQUIRED FOR COMPLETE AND PROPER INSTALLATION. IN ADDITION, PROVIDE PIPE SUPPORTS IN LOCATIONS SPECIFICALLY IDENTIFIED ON PLANS.
5. TYPICAL DETAILS: ARE INTENDED TO SHOW GENERAL DESIGN CONCEPT. SPECIAL INFORMATION CONCERNING ELEVATIONS AND DIMENSIONS SHOWN ON THESE DETAILS PERTAIN TO A PARTICULAR BUILDING OR STRUCTURE.
6. INFORMATION REGARDING EXISTING CONSTRUCTION WAS COMPILED FROM THE ORIGINAL CONSTRUCTION DOCUMENTS AND PRELIMINARY FIELD INVESTIGATIONS. ALL CONDITIONS, DIMENSIONS AND SIZES ARE TO BE FIELD VERIFIED BY THE CONTRACTOR TO ENSURE FIT BETWEEN THE NEW AND EXISTING. NOTIFY THE ENGINEER OF DISCREPANCIES NOTED BEFORE AND DURING CONSTRUCTION.
7. DRAWINGS SHALL NOT TAKE PRECEDENCE OVER FIELD MEASUREMENTS.
8. DUE TO REPRODUCTIVE PROCESSES, DRAWINGS MAY NOT BE ACCURATE TO SCALE. ALL DIMENSIONS SHALL TAKE PRECEDENCE OVER SCALE SHOWN AND IN NO CASE SHALL WORKING DIMENSIONS BE SCALED FROM PLANS, SECTIONS, ELEVATIONS OR DETAILS.
9. ALL WORK SHALL BE COORDINATED WITH OTHER TRADES. THE CONTRACTOR SHALL CONSULT ALL DRAWINGS AND VARIOUS CONSTRUCTION TRADES TO ACQUAINT SELF WITH THE PROJECT. CONTRACTOR SHALL IMMEDIATELY NOTIFY ENGINEER OF ANY DISCREPANCIES NOTED BEFORE AND DURING CONSTRUCTION. THE ENGINEER RESERVES THE RIGHT TO MAKE REASONABLE MODIFICATIONS IN LAYOUT TO AVOID CONFLICT WITH THE WORK OF OTHER TRADES AND FOR THE PROPER EXECUTION OF THE WORK AT NO ADDITIONAL COST TO THE OWNER.
10. ALL WORK SHALL BE CONDUCTED WITHIN THE LIMITS OF CONSTRUCTION. CONTRACTOR SHALL REPAIR AND RESTORE ANY PAVEMENT, UTILITIES, OR OTHER FEATURES OUTSIDE THE LIMITS OF CONSTRUCTION THAT ARE DAMAGED DUE TO THE CONTRACTOR'S ACTS OR NEGLIGENCE AT THE CONTRACTOR'S OWN EXPENSE.
11. THE CONTRACTOR SHALL COMPLY WITH ALL CITY, COUNTY, AND STATE ROAD RESTRICTIONS FOR HAULING AND EQUIPMENT MOBILIZATION.
12. THE CONTRACTOR SHALL ASSUME FULL RESPONSIBILITY FOR ANY ADDITIONAL COSTS WHICH MAY RESULT FROM UNAUTHORIZED DEVIATIONS FROM THE CONTRACT DOCUMENTS.
13. CONTRACTOR SHALL PROTECT ALL EXISTING AND INSTALLED PIPING, EQUIPMENT, AND STRUCTURES DURING CONSTRUCTION NOT NOTED TO BE REMOVED. ALL DAMAGED ITEMS SHALL BE REPAIRED OR REPLACED WITH NO ADDITIONAL COST TO THE OWNER.
14. ALL APPLICABLE FEDERAL, STATE, AND LOCAL LAWS AND ORDINANCES SHALL BE ADHERED TO THROUGHOUT THE CONSTRUCTION PROJECT.
15. SIZE OF FITTINGS AND VALVES SHALL CORRESPOND TO THE SIZE OF ADJACENT PIPING. JOINTS AND FITTING MATERIAL SHALL BE AS SHOWN FOR ADJACENT PIPING.
16. PROVIDE PROPER PLUGS, CAPS, AND RESTRAINTS WHEN ANY PIPING IS TERMINATED.
17. THE EXACT LOCATION OF UNDERGROUND UTILITIES SUCH AS NATURAL GAS, TELEPHONE, FIBEROPTIC, ELECTRIC, CABLE TV, AND PIPE LINES ARE UNKNOWN. CONTRACTOR SHALL CONTACT NEBRASKA 811, CALL AT (800) 331-5666 BEFORE COMMENCING ANY EXCAVATION.
18. SOME ITEMS HAVE BEEN ROTATED INTO THE PLANE OF PROJECTION ON TYPICAL SECTIONS FOR CLARITY.
19. 5.0 FOOT COVER MINIMUM UNLESS OTHERWISE NOTED. PIPE BURIED WITH LESS THAN 7.5 FOOT OF COVER SHALL BE INSULATED IN ACCORDANCE WITH SECTION 40 42 13 - PROCESS PIPING INSULATION.

SEH

NOT FOR CONSTRUCTION

Project Owner

SEWARD NEBRASKA

SEWARD, NEBRASKA
METERING MANHOLE AND SAMPLING BUILDING

2846-2866 WALKER ROAD
SEWARD, NE 68434

This drawing is an instrument of service and shall remain the property of Short Elliott Hendrickson, Inc. (SEH). This drawing, concepts and ideas contained herein shall not be used, reproduced, revised, or retained without the express written approval of SEH.

Submission or distribution of this drawing to meet official or regulatory requirements or for purposes in connection with the project is not to be construed as publication in derogation of any of the rights of SEH.

COPYRIGHT © 2024
Short Elliott Hendrickson, Inc.
All Rights Reserved

SEH Project	SEWAC 163917
Checked By	CRB
Drawn By	CRR

Project Status	**Issue Date**
CLIENT REVIEW	02/13/2026

REVISION SCHEDULE

REV. #	DESCRIPTION	DATE

GENERAL PROCESS INFORMATION

P001

THIS BAR IS INTENDED TO BE 1" PRINTED AT FULL SCALE 2/10/2026 3:40:23 PM

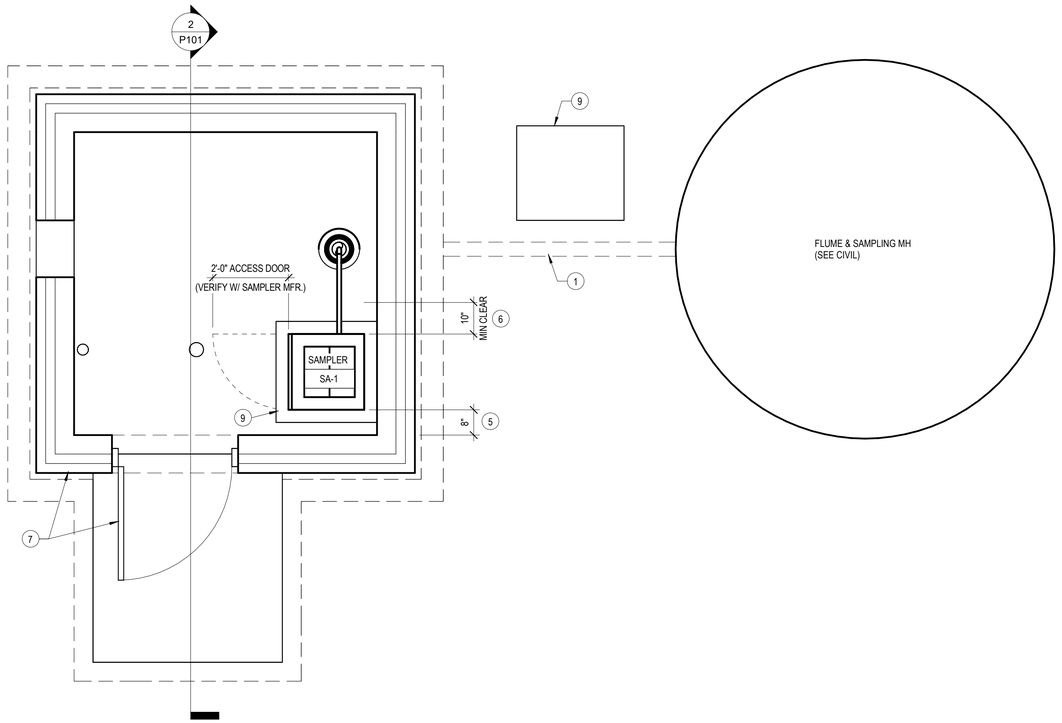

1 P101 MAIN LEVEL PLAN
1/2" = 1'-0"
0 1' 2' 4'

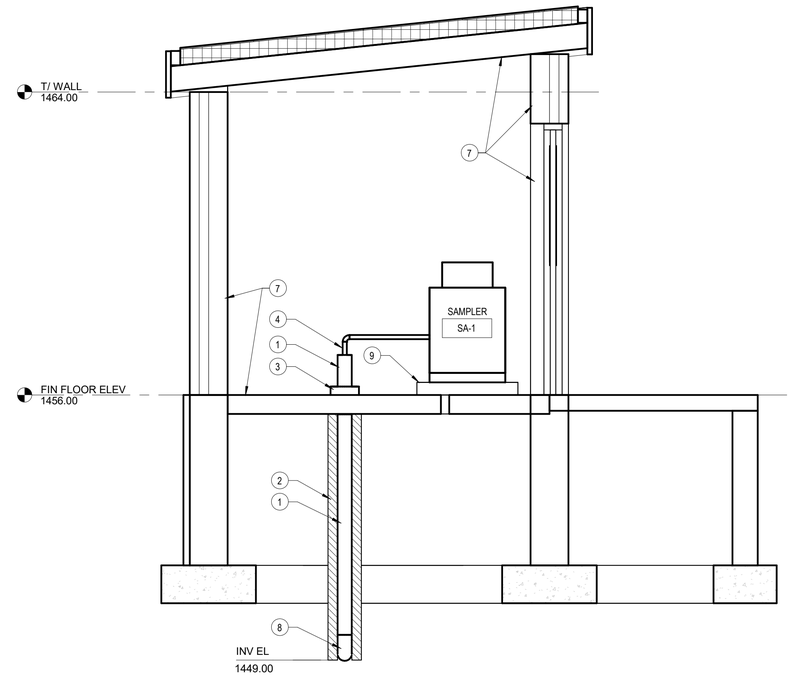

2 P101 BUILDING SECTION
1/2" = 1'-0"
0 1' 2' 4'

KEYNOTES

1. 4" SCH 80 PVC CONTAINMENT PIPE, POLYETHYLENE (PE) CARRIER TUBING FROM FLUME & SAMPLING MH. CONTRACTOR TO PROVIDE 50 FT OF SAMPLER TUBING PER MANUFACTURER (TELEDYNE ISCO) AND SAMPLER STRAINER END PIECE TO BE PLACED AHEAD OF PARSHALL FLUME. SEE FLUME AND SAMPLING MH DETAILS.
2. PROVIDE 2" INSULATION AROUND VERTICAL BURIED PORTION OF CONTAINMENT PIPE.
3. SEALED FLOOR SLEEVE, SEE DETAIL 4/C4.
4. SAMPLER SUPPLY AND DRAIN PE TUBING
5. MIN CLEARANCE FOR SAMPLER DOOR LATCH
6. MIN CLEARANCE FOR SAMPLER PUMP REMOVAL
7. PRECAST CONCRETE BUILDING SHOWN FOR REFERENCE ONLY. BUILDING TO BE DESIGNED BY PRECAST CONCRETE BUILDING MANUFACTURER.
8. ALL BENDS ON PVC PIPE SHALL BE LONG RADIUS BENDS.
9. CONCRETE EQUIPMENT PAD, SEE STRUCTURAL.

Need structural equ pad detail

THIS BAR IS INTENDED TO BE 1" PRINTED AT FULL SCALE 2/10/2026 3:04:27 PM

SEH

NOT FOR CONSTRUCTION

Project Owner
SEWARD NEBRASKA

SEWARD, NEBRASKA
METERING MANHOLE AND SAMPLING BUILDING

2846-2886 WALKER ROAD
SEWARD, NE 68434

This drawing is an instrument of service and shall remain the property of Short Elliott Hendrickson, Inc. (SEH). This drawing, concepts and ideas contained herein shall not be used, reproduced, revised, or retained without the express written approval of SEH.

Submission or distribution of this drawing to meet official or regulatory requirements or for purposes in connection with the project is not to be construed as publication in derogation of any of the rights of SEH.

COPYRIGHT © 2024
Short Elliott Hendrickson, Inc.
All Rights Reserved

SEH Project	SEWAC 163917
Checked By	CRB
Drawn By	CRR

Project Status	**Issue Date**
CLIENT REVIEW	02/13/2026

REVISION SCHEDULE

REV. #	DESCRIPTION	DATE

SAMPLING BUILDING DETAILS

P101

GENERAL NOTES

MECHANICAL GENERAL NOTES

1. ALL WORK SHALL BE PERFORMED IN STRICT COMPLIANCE WITH THE MANUFACTURER'S RECOMMENDATIONS AND CURRENT STATE BUILDING, PLUMBING, MECHANICAL, FUEL GAS, FIRE AND ENERGY CODES, ALL LOCAL CODES, STANDARDS, AND REGULATIONS GOVERNING THE WORK.
2. ALL CONTRACTORS SHALL FAMILIARIZE THEMSELVES WITH THE MECHANICAL DRAWINGS AND SPECIFICATIONS PRIOR TO BID. PROVIDE ALL EQUIPMENT, MATERIALS, AND LABOR AS REQUIRED FOR THE COMPLETE INSTALLATION FOR ALL WORK AS SHOWN AND PROVIDE FOR A COMPLETE, OPERABLE SYSTEM. ALL WORK SHALL BE PERFORMED IN A CLEAN, RECTILINEAR AND WORKMANLIKE MANNER.
3. THE DRAWINGS ARE DIAGRAMMATIC, INTENDED TO CONVEY THE SCOPE OF WORK AND TO INDICATE THE GENERAL ARRANGEMENT AND APPROXIMATE ROUTING. CERTAIN BASIC ITEMS SUCH AS OFFSETS, FITTINGS, ACCESS PANELS, HANGERS, AND SLEEVES MAY NOT BE SHOWN. WHERE SUCH ITEMS ARE REQUIRED FOR PROPER INSTALLATION OF THE WORK, SUCH ITEMS SHALL BE INCLUDED. CONTRACTOR SHALL VERIFY CONNECTIONS, CLEARANCES, AND SERVICES PRIOR TO INSTALLATION.
4. COORDINATE FINAL LOCATIONS OF DUCTWORK, PIPING AND MECHANICAL EQUIPMENT WITH OTHER TRADES PRIOR TO BEGINNING WORK TO AVOID INTERFERENCES WITH EQUIPMENT, STRUCTURE, PIPING, LIGHTING, CONDUIT, ETC. PROVIDE OFFSETS AS REQUIRED TO MEET SPACE REQUIREMENTS AND TO AVOID INTERFERENCES. NO PIPING SHALL BE RUN OVER THE TOP OF ANY ELECTRICAL PANELS OR ELECTRICAL EQUIPMENT.
5. EQUIPMENT AND MATERIALS SHALL BE PROTECTED FROM WEATHER, PAINTING, PLASTER, ETC. UNTIL THE PROJECT IS COMPLETE. DAMAGE FROM RUST, PAINT, SCRATCHES, ETC., SHALL BE REPAIRED AS REQUIRED TO RESTORE EQUIPMENT TO ORIGINAL CONDITION AT NO COST TO OWNER.
6. CONTRACTOR SHALL COORDINATE ALL WALL AND ROOF OPENINGS AS IT RELATES TO THEIR WORK. CUTTING OF STRUCTURAL SUPPORT MEMBERS WILL NOT BE PERMITTED WITHOUT PRIOR WRITTEN APPROVAL OF THE STRUCTURAL ENGINEER. EXTENT OF CUTTING SHALL BE MINIMIZED TO PROVIDE THE NEAT MINIMUM OPENING REQUIRED PATCHING SHALL MATCH ADJACENT MATERIALS AND SURFACES.
7. TEMPORARY SHUT DOWNS OF MECHANICAL SYSTEMS, IF REQUIRED, SHALL BE COORDINATED WITH THE OWNER IN ORDER TO MINIMIZE THE INTERRUPTIONS TO THE OWNER.
8. NO MECHANICAL SERVICES OR EQUIPMENT SHALL BE LOCATED OVER ELECTRICAL EQUIPMENT, ELEVATOR EQUIPMENT, OR TELEPHONE EQUIPMENT ROOM.
9. CONTRACTOR SHALL INSTALL AS MUCH OF THE NEW SYSTEM AS POSSIBLE, PRIOR TO REMOVING EXITING SYSTEMS IN ORDER TO MINIMIZE THE AMOUNT OF DOWN TIME. REFER TO SPECIFICATIONS.

PLUMBING GENERAL NOTES

1. PIPE OPENINGS THROUGH FIRE RATED WALLS SHALL BE CAULKED WITH AN INTUMESCENT MATERIAL.
2. EXCAVATE UNDER FLOOR TRENCH, INSTALL PIPING AND BACK FILL WITH CLEAN SAND. COMPACT AND REPLACE FLOOR TO MATCH EXISTING.
3. PIPING SHOWN IS SCHEMATIC TO SHOW SIZES AND GENERAL LOCATIONS. ROUTE PIPING AS REQUIRED FOR CLEARANCE WITH STRUCTURAL CONDITIONS.
4. INSTALL PIPING TO MAINTAIN HEADROOM. CONSERVE SPACE, AND NOT INTERFERE WITH USE OF SPACE. GROUP PIPING WHERE PRACTICAL AT COMMON ELEVATIONS. ROUTE PIPING IN A RECTILINEAR, ORDERLY MANNER AND MAINTAIN GRADIENT. ROUTE PIPING PARALLEL AND PERPENDICULAR TO WALL IN CEILING SPACE.
5. COORDINATE ROUGH-IN AND FINAL LOCATIONS OF NEW AND RELOCATED PIPING WITH EXISTING LIGHTING. STRUCTURE, PROCESS, PIPING AND DUCTWORK, ETC. PROVIDE OFFSETS AN/OR EASEMENTS AS REQUIRE TO AVOID CONFLICTS WITH WORK OF ALL OTHER TRADES.
6. INSTALL PIPING TO ALLOW FOR EXPANSION AND CONTRACTION WITHOUT STRESSING PIPE, JOINTS OR CONNECTION PIPING.
7. PROVIDE CLEARANCE IN HANGERS AND FROM STRUCTURE AND OTHER EQUIPMENT FOR INSTALLATION OF INSULATION AND ACCESS TO VALVES AND FITTINGS.
8. ROUGH-IN AND CONNECT ALL PLUMBING TO FIXTURES AND EQUIPMENT FURNISHED AND INSTALLED BY OTHERS.
9. PROVIDE SHUT-OFF VALVES AT ALL EQUIPMENT AND ALL BRANCH PIPING OFF OF THE MAINS.

HVAC GENERAL NOTES

1. FABRICATE AND SUPPORT ALL DUCTWORK IN ACCORDANCE WITH SMACNA HVAC DUCT CONSTRUCTION STANDARDS, METAL AND FLEXIBLE, CURRENT EDITION.
2. ALL DUCTWORK IS SHOWN IN SCHEMATIC FORM. NOT ALL RISES AND DROPS ARE SHOWN. PROVIDE OFFSETS AS REQUIRED TO MEET SPACE REQUIREMENTS AND TO AVOID INTERFERENCES WITH OTHER TRADES.
3. ELBOWS SHALL BE SQUARE ELBOWS CONSTRUCTED WITH TURNING VANES. RADIUS ELBOWS WITH CENTERLINE RADIUS OF NOT LESS THAN 1.5 TIMES THE DUCT WIDTH MAY BE USED WHERE SPACE CONDITIONS PERMIT OR WHERE INDICATED ON DRAWINGS.
4. ALL BRANCH DUCT TAPS SHALL BE CONICAL FITTINGS ON ROUND MAINS AND SHALL BE 45 DEG ENTRY FITTINGS ON RECTANGULAR MAINS.
5. MAXIMUM LENGTH OF FLEXIBLE DUCT SHALL NOT EXCEED 5'-0" FLEXIBLE DUCT SHALL BE METALFLEX FLEXIBLE DUCT WITH 1" EXTERNAL FIBERGLASS INSULATION AND VAPOR BARRIER JACKET.
6. MANUAL VOLUME DAMPERS SHALL BE PROVIDED ON ALL RETURN, SUPPLY AND EXHAUST BRANCH DUCTS.
7. SUPPORT ALL DUCTWORK, EQUIPMENT, ETC., FROM TOP CHORD OF BAR JOISTS OR STEEL FRAMING BEAMS.
8. ALL DUCTWORK IN CHEMICAL STORAGE ROOMS SHALL BE FIBERGLASS (FRP) WITH FIBERGLASS HANGERS AND HARDWARE.
9. ALL DUCT SIZES SHOWN ARE CLEAR INSIDE DIMENSIONS. INCREASE SHEET METAL SIZE TO ACCOMMODATE DUCT LINER AS REQUIRED BY THE SPECIFICATIONS.
10. ALL SHEET METAL CONNECTIONS AND JOISTS SHALL BE SEALED TO SMACNA CLASS A.
11. DIFFUSER, GRILLE, AND REGISTER LOCATIONS. SHALL BE COORDINATED WITH THE ARCHITECT'S REFLECTED CEILING PLANS AND ELECTRICAL LIGHTING PLAN.
12. CHANGE DUCT SIZES GRADUALLY. LIMIT SLOPES FOR TRANSITIONS TO A MAXIMUM OF 1 INCH CHANGE IN WIDTH FOR EVERY 3 INCHES OF LENGTH OF APPROXIMATELY 15 DEG. A MAXIMUM OF 30 DEG IS ACCEPTABLE DIRECTLY ADJACENT TO EQUIPMENT.

GENERAL ABBREVIATIONS

ABV	ABOVE	LB	POUND
AC	AIR CONDITIONING	LB/HR	POUNDS PER HOUR
AD	AREA DRAIN	LWT	LEAVING WATER TEMPERATURE
ADD	ADDENDUM	MAT	MIXED AIR TEMPERATURE
AFF	ABOVE FINISHED FLOOR	MAX	MAXIMUM
AFUE	ANNUAL FUEL UTILIZATION EFF.	MBH	THOUSAND BTUH
ALT	ALTERNATE	MCF	THOUSAND CUBIC FEET
AP	ACCESS PANEL	MD	MOTORIZED DAMPER
APD	AIR PRESSURE DROP	MECH	MECHANICAL
ARCH	ARCHITECT/ARCHITECTURAL	MFR	MANUFACTURER
BCO	BUILDING CLEANOUT	MIN	MINIMUM
BFF	BELOW FINISHED FLOOR	MISC	MISCELLANEOUS
BLW	BELOW	MTR	MOTOR
BTU	BRITISH THERMAL UNITS	MUA	MAKE-UP AIR
BTUH	BTU PER HOUR	NC	NOISE CRITERIA
CAP	CAPACITY	NC	NORMALLY CLOSED
CB	CATCH BASIN	NIC	NOT IN CONTRACT
CC	COOLING COIL	NO	NORMALLY OPEN
CFM	CUBIC FEET PER MINUTE	NTS	NOT TO SCALE
CLG	CEILING	O	OXYGEN
CO	CLEAN OUT	Ø	ROUND
D	DEGREE	OA	OUTSIDE AIR
DB	DRY BULB	ORD	OVERFLOW ROOF DRAIN
DIA	DIAMETER	PD	PRESSURE DROP
DN	DOWN	PIV	POST INDICATOR VALVE
E, EX	EXISTING	PLBG	PLUMBING
EA	EXHAUST AIR	PRESS	PRESSURE
EAT	ENTERING AIR TEMPERATURE	PRV	PRESSURE REDUCING VALVE
ELEC	ELECTRICAL	PSI	POUNDS PER SQUARE INCH
EQUIP	EQUIPMENT	PSIG	POUNDS PER SQUARE INCH GAUGE
EWT	ENTERING WATER TEMP.	RA	RETURN AIR
F	DEGREES FAHRENHEIT	RD	ROOF DRAIN
FCO	FLOOR CLEAN OUT	RH	RELATIVE HUMIDITY
FD	FLOOR DRAIN	RM	ROOM
FD	FIRE DAMPER	RPM	REVOLUTIONS PER MINUTE
FDV	FIRE DEPARTMENT VALVE	SA	SUPPLY AIR
FL	FLOOR	SD	SMOKE DAMPER
FPM	FEET PER MINUTE	SF	SQUARE FOOT
FS	FLOOR SINK	SP	STATIC PRESSURE
FSD	FIRE SMOKE DAMPER	T	THERMOSTAT
FT	FEET	TD	TEMPERATURE DROP
FT HD	FEET OF HEAD	TDR	TRENCH DRAIN
FTR	FIN TUBE RADIATION	TEMP	TEMPERATURE
GA	GAUGE	TYP	TYPICAL
GAL	GALLON	UG	UNDERGROUND
GC	GENERAL CONTRACTOR	V	VENT
GPH	GALLONS PER HOUR	VAC	VACUUM
GPM	GALLONS PER MINUTE	VTR	VENT THROUGH ROOF
HB	HOSE BIB	WB	WET BULB
HP	HORSE POWER	WC	WATER COLUMN
IN	INCH	WCO	WALL CLEAN OUT
INV	INVERT	WG	WATER GAUGE
LAT	LEAVING AIR TEMPERATURE	WPD	WATER PRESSURE DROP

MECHANICAL EQUIPMENT

MECHANICAL EQUIPMENT TAG

EQUIPMENT TYPE (SEE TABLE BELOW) — XXX-1 — EQUIPMENT NUMBER

AC	AIR COMPRESSOR	GI	GREASE INTERCEPTOR
ACC	AIR COOLED CONDENSER	GRH	GAS FIRED RADIANT HEATER
ACCH	AIR COOLED CHILLER	GRV	GRAVITY ROOF VENTILATOR
AHU	AIR HANDLING UNIT	GUH	GAS FIRED UNIT HEATER
AS	AIR SEPARATOR	HB	HOSE BIBB
B	BOILER	HP	HEAT PUMP UNIT (AIR-AIR)
BC	BOOSTER COIL (HOT WATER)	HS	HAND SINK
CH	CHILLER	HWC	HW CONVECTOR
CHWC	CHILLED WATER COIL	HWHC	HOT WATER HEATING COIL
CHWP	CHILLED WATER PUMP	HWUH	HOT WATER UNIT HEATER
CP	CONDENSATE PUMP	HX	HEAT EXCHANGER
CRU	COMPUTER ROOM UNIT	HYD	WALL HYDRANT
CT	COOLING TOWER	L	LAVATORY
CUH	CABINET UNIT HEATER	L	LOUVER
CWP	CONDENSER WATER PUMP	LBG	LINEAR BAR GRILLE
DBP	DOMESTIC WATER BOOSTER PUMP	MAU	MAKEUP AIR UNIT
DCP	DOMESTIC WATER CIRC. PUMP	P	PUMP
DSF	DESTRATIFICATION FAN	PRV	POWER ROOF VENTILATOR
DG	DOOR GRILLE	RTU	ROOFTOP AIR HANDLING UNIT
DL	DRUM LOUVER	RCP	RECIRCULATING PUMP
DRP	DOMESTIC RECIRCULATION PUMP	RD	ROUND DIFFUSER
DS	DUCT SILENCER	RG	RETURN GRILLE
DU	DEHUMIDIFICATION UNIT	RTF	RETURN FAN
DXC	DX COIL	RTU	ROOFTOP UNIT
EBB	ELECTRIC BASE BOARD HEATER	RV	ROOF VENT
ECH	ELECTRIC COVE HEATER	SD	SLOT DIFFUSER
EDH	ELECTRIC DUCT HEATER	SEP	SEWAGE EJECTOR PUMP
EF	EXHAUST FAN	SF	SUPPLY FAN
EG	EXHAUST GRILLE	SG	SUPPLY GRILLE
EHMD	ELECTRIC HUMIDIFIER	SP	SUMP PUMP
ERV	ENERGY RECOVERY VENTILATOR	TF	TRANSFER FAN
ET	EXPANSION TANK	TG	TRANSFER GRILLE
EUH	ELECTRIC UNIT HEATER	UH	UNIT HEATER
EVAP	REMOTE EVAPORATOR	UV	UNIT VENTILATOR
EWC	ELECTRIC WATER COOLER	VAV	VAV BOX (WITH OR WITHOUT COIL)
EWH	ELECTRIC WALL HEATER	VP	VACUUM PUMP
EWH	ELECTRIC WATER HEATER	WH	WATER HEATER
F	FURNACE	WS	WATER SOFTENER
FCU	FAN COIL UNIT		
FP	FIRE PUMP		
FTR	FINNED TUBE RADIATION		
GHMD	GAS FIRED HUMIDIFIER		

HVAC SYMBOLS

- SUPPLY AIR DUCT UP/DOWN
- RETURN AIR DUCT UP/DOWN
- EXHAUST AIR DUCT UP/DOWN
- 12/6 — RECTANGULAR DUCT SIZE TAG (WIDTH / HEIGHT)
- 12ø — ROUND DUCT SIZE TAG (DIAMETER)
- SUPPLY AIR DIFFUSER
- RETURN AIR/EXHAUST AIR GRILLE
- LINEAR DIFFUSER
- T — TEMPERATURE SENSOR / THERMOSTAT
- H — HUMIDISTAT
- S — SPEED SWITCH
- CO2 — CO2 SENSOR
- FD — FIRE DAMPER
- SD — SMOKE DAMPER
- FSD — FIRE/SMOKE DAMPER
- CRD — CEILING RADIATION DAMPER
- VD — VOLUME DAMPER
- M — MD — MOTORIZED DAMPER
- FLEXIBLE DUCT
- TURNING VANES

AIR DEVICES TAGS

ABBREVIATIONS

CD	CEILING DIFFUSER
DG	DOOR GRILLE
DL	DRUM LOUVER
EG	EXHAUST GRILLE
L	LOUVER
LBG	LINEAR BAR GRILLE
RD	ROUND DIFFUSER
RG	RETURN GRILLE
SD	SLOT DIFFUSER
SG	SUPPLY GRILLE
TG	TRANSFER GRILLE

TYPICAL SUPPLY DIFFUSER TAG

DUCT CONNECTION SIZE; DIFFUSER MARK; AIRFLOW — CD1 | 8" / 200 CFM

TYPICAL GRILLE TAG

GRILLE SIZE; GRILLE MARK; AIRFLOW — RG1 | 8/8 / 200 CFM

PLUMBING FIXTURES

PLUMBING FIXTURE TAG

FIXTURE TYPE (SEE TABLE BELOW AND PLUMBING FIXTURE SCHEDULE) — XXX-1 — FIXTURE NUMBER

BS	BEAUTY SINK	MB	MOP BASIN
BT	BATH TUB	SH	SHOWER
DF	DRINKING FOUNTAIN	SK	SINK
DW	DISHWASHER	SS	SAFETY SHOWER
EW	EYE WASH STATION	SSEW	SAFETY SHOWER EYE WASH
EWC	ELECTRIC WATER COOLER	SSK	SERVICE SINK
FDC	FIRE DEPARTMENT CONN.	UR	URINAL
GD	GARBAGE DISPOSAL	W	LAUNDRY WASHER BOX
HB	HOSE BIBB	WC	WATER CLOSET
HS	HAND SINK	WDF	WASH DOWN FAUCET
L	LAVATORY	WDR	WASH DOWN REEL
LS	LAB SINK	WF	WASH FOUNTAIN
LT	LAUNDRY TUB	WH	WALL HYDRANT
		WO	WALL OUTLET (LAMB'S TONGUE)

DRAIN TAGS

DRAIN CONNECTION SIZE — X" XX-1 — DRAIN TYPE (SEE TABLE BELOW AND PLUMBING FIXTURE SCHEDULE)

AD	AREA DRAIN
DW	DISHWASHER
FD	FLOOR DRAIN
FS	FLOOR SINK
FFD	FUNNEL FLOOR DRAIN
ORD	OVERFLOW ROOF DRAIN
OSD	OPEN SIGHT DRAIN
RD	ROOF DRAIN
TD	TRENCH DRAIN
TTFD	TELL-TALE FLOOR DRAIN

PLUMBING AND PIPING SYMBOLS

- NEW CONSTRUCTION
- EXISTING PIPE TO BE REMOVED
- EXISTING PIPE TO REMAIN
- UNDERGROUND PIPING

HWS	HWS	HYDRONIC HOT WATER SUPPLY
HWR	HWR	HYDRONIC HOT WATER RETURN
CHWS	CHWS	CHILLED WATER SUPPLY
CHWR	CHWR	CHILLED WATER RETURN
REF	REF	REFRIGERANT SUCTION / LIQUID
CD	CD	CONDENSATE
	CW	COLD WATER
H-CW	H-CW	HARD COLD WATER
S-CW	S-CW	SOFTENED COLD WATER
	HW	DOMESTIC HOT WATER
	RHW	RECIRCULATED HOT WATER
RO	RO	REVERSE OSMOSIS WATER
T	T	TEMPERED EYEWASH WATER
G	G	NATURAL GAS
NPW	NPW	NON-POTABLE WATER
W1	W1	POTABLE WATER
W2	W2	NON-POTABLE WATER
W3	W3	PLANT EFFLUENT
OSD	OSD	OVERFLOW STORM DRAIN
SD	SD	STORM DRAIN
SAN	SAN	SANITARY SEWER DRAIN
V	V	VENT
CWV	CWV	COMBINATION WASTE AND VENT
IW	IW	INDIRECT WASTE
PD	PD	PUMP DISCHARGE

SCHEMATIC SYMBOLS

- ELBOW UP
- ELBOW DOWN
- TEE UP
- TEE DOWN
- CAPPED OR PLUGGED PIPE
- FLUID FLOW
- UNION
- STRAINER
- PIPE ANCHOR
- PIPE EXPANSION JOINT
- PIPE PITCH DOWN
- BALL VALVE
- GATE VALVE
- STOP VALVE
- GLOBE VALVE
- BUTTERFLY VALVE
- CHECK VALVE
- BACKFLOW PREVENTER
- OR — RELIEF VALVE
- PRESSURE REDUCING VALVE
- PRESSURE GAUGE
- PIPE THERMOMETER
- 2-WAY CONTROL VALVE
- 3-WAY CONTROL VALVE
- BALANCING VALVE
- DRAIN VALVE
- FIN-TUBE RADIATION
- FIN-TUBE RADIATION IN CABINET
- BARE PIPE IN CABINET
- CABINET ONLY
- PUMP
- FLOOR SINK SYMBOL
- FLOOR DRAIN SYMBOL
- STORM DRAIN SYMBOL

GENERAL MECHANICAL SYMBOLS

- 1 — REVISION NUMBER; REVISION CLOUD
- 1 — PLAN KEYNOTE
- CONTINUATION SYMBOL
- ROOM NAME # — ROOM NAME AND NUMBER
- CONNECT TO EXISTING
- # / # — NUMBER OF DETAIL ON SHEET; SHEET WHERE DETAIL APPEARS

MECHANICAL SHEET INDEX

M001	MECHANICAL SYMBOLS AND ABBREVIATIONS
M101	GRADE LEVEL MECHANICAL PLAN

NOTE

ALL GENERAL NOTES ON THIS SHEET ARE TO BE APPLIED TO ALL OTHER DRAWINGS IN THIS SET. THE SYMBOLS AND ABBREVIATIONS SHOWN ON THIS SHEET MAY OR MAY NOT BE USED IN THIS SET OF DRAWINGS.

SEH

NOT FOR CONSTRUCTION

Project Owner

SEWARD NEBRASKA

SEWARD, NEBRASKA
METERING MANHOLE AND SAMPLING BUILDING

2486-2886 WALKER ROAD,
SEWARD, NE 68434

This drawing is an instrument of service and shall remain the property of Short Elliott Hendrickson, Inc. (SEH). This drawing, concepts and ideas contained herein shall not be used, reproduced, revised, or retained without the express written approval of SEH.

Submission or distribution of this drawing to meet official or regulatory requirements or for purposes in connection with the project is not to be construed as publication in derogation of any of the rights of SEH.

COPYRIGHT © 2024
Short Elliott Hendrickson, Inc.
All Rights Reserved

SEH Project	163917
Checked By	CJA/NJB
Drawn By	TRD

Project Status	**Issue Date**
CLIENT REVIEW	02/13/2026

REVISION SCHEDULE

REV. #	DESCRIPTION	DATE

MECHANICAL SYMBOLS AND ABBREVIATIONS

M001

THIS BAR IS INTENDED TO BE 1" PRINTED AT FULL SCALE 2/11/2026 4:44:20 PM

PACKAGED TERMINAL AC SCHEDULE

EQUIPMENT NUMBER	MANUFACTURER	MODEL NUMBER	SERVES	CAPACITY (MBH)		REFRIGERANT	INDOOR FAN DATA			OUTDOOR FAN...		HEATER ELECTRICAL			ELECTRICAL		WEIGHT	NOTES
				TOTAL	SENSIBLE		CFM	H.P.	E.S.P	CFM	H.P.	KW	MCA	MOCP	LRA	V/PH/CY		
PTAC-1	BARD	W12AF-A03-XXX3X	SAMPLING...	13.0	9.6	R-454B	425	1/8	0.1	1,000	1/12	3.0	19.0	25.0	26	230/208/1/60	182	ALL

NOTES:

1) CAPACITY RATINGS BASED ON 95°F OUTDOOR AMBIENT
2) ROOM TEMPERATURE SETPOINT SHALL BE 80°F IN SUMMER, 50° IN...
3) PROVIDE REMOTE PROGRAMABLE THERMOSTAT
4) PROVIDE FACTORY MOUNTED AND WIRED DISCONNECT
5) SELECT UNIT WITH FACTORY SUPPLIED SUPPLY AND RETURN GRILLES
6) BOTTOM OF UNIT TO BE MOUNTED 3'-0" ABOVE FINISHED CONCRETE SLAB

FAN SCHEDULE

EQUIPMENT NUMBER	MANUFACTURER	MODEL NUMBER	SERVES	LOCATION	CFM	E.S.P. (IN. W.G.)	MOTOR				NOTES
							ROTATION	HP	RPM	V/CY/PH	
EF-1	GREENHECK	6-BCSW-FRP-4-I-4	FLUME & SAMPLING MH	ON GRADE	222	0.308	CCW	1/4	890	115/60/1	ALL

NOTES:

1) FACTORY MOUNTED AND WIRED DISCONNECT. EXPLOSION PROOF
2) EXPLOSION PROOF MOTOR.
3) SPARK RESISTANT CONSTRUCTION (AMCA "A")
4) PHENOLIC EPOXY CORROSION COATING
5) FACTORY WEATHER HOOD OVER MOTOR
6) FACTORY VIBRATION ISOLATION MOUNT
7) DISCHARGE AIR WEATHER HOOD WITH BACKDRAFT DAMPER AND BIRD SCREEN
8) 4" CONCRETE EQUIPMENT PAD

KEYNOTES (X)

Need separate equ pad detail

1. MOUNT EXHAUST FAN ON 4" THICK EQUIPMENT PAD. EXTEND PAD 6" ON ALL SIDES OF EXHAUST FAN. REFER TO DETAIL 3/M101 FOR FAN INSTALLATION. REFER TO DETAIL 11/S501 FOR EQUIPMENT PAD INSTALLATION.
2. MOUNT PTAC UNIT 36" ABOVE FINISHED FLOOR.
3. ENSURE ALL WALL PENETRATIONS ARE SEALED WEATHERTIGHT.
4. INTERLOCK FAN CONTROL WITH LIGHT SWITCH.

PLUMBING FIXTURE SCHEDULE

FIXTURE NUMBER	MANUFACTURER	MODEL NUMBER	DESCRIPTION	PIPING CONNECTIONS	
				WASTE	VENT
FD-1	ZURN	Z-415B	5" DIAMETER DURA-COATED CAST IRON BODY. FLASHING COLLAR. ADJUSTABLE NICKEL BRONZE STRAINER.	4"	3"

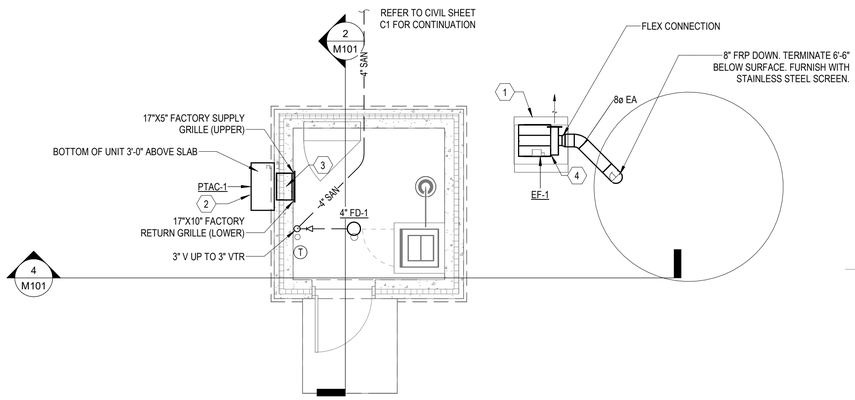

1 M101 GRADE LEVEL MECHANICAL PLAN
1/4" = 1'-0"
0 2' 4' 8'

PROJECT NORTH

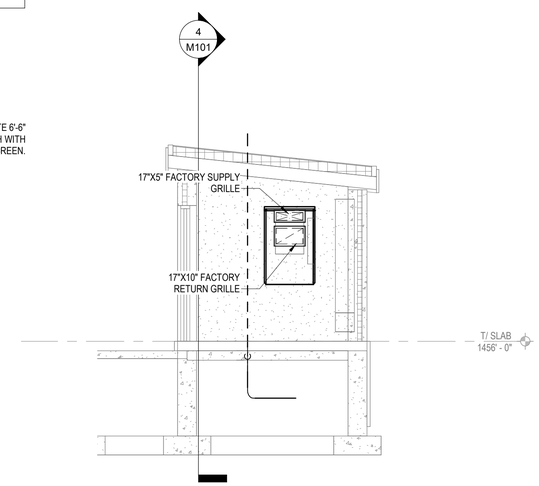

2 M101 MECHANICAL SECTION - WEST WALL
1/4" = 1'-0"
0 2' 4' 8'

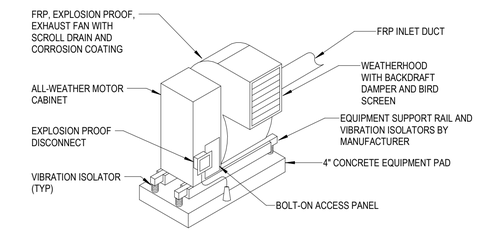

3 M101 CENTRIFUGAL EXHAUST FAN - HORIZONTAL DISCHARGE
NOT TO SCALE

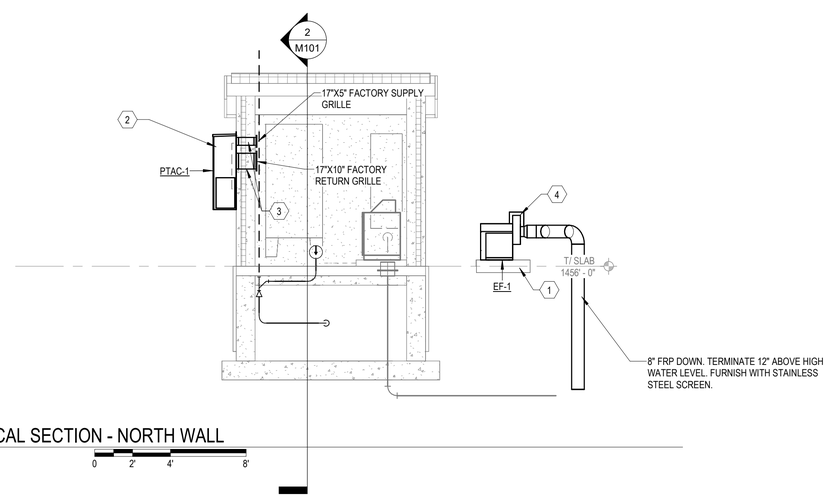

4 M101 MECHANICAL SECTION - NORTH WALL
1/4" = 1'-0"
0 2' 4' 8'

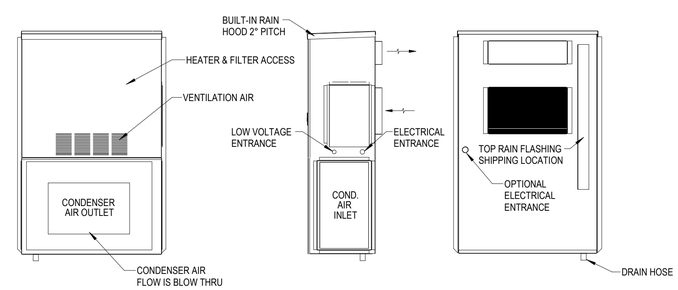

5 M101 PACKAGED TERMINAL AIR CONDITIONER (PTAC)
NOT TO SCALE

THIS BAR IS INTENDED TO BE 1" PRINTED AT FULL SCALE 2/11/2026 4:44:20 PM

SEH

NOT FOR CONSTRUCTION

Project Owner
SEWARD NEBRASKA

SEWARD, NEBRASKA
METERING MANHOLE AND SAMPLING BUILDING

2486-2886 WALKER ROAD,
SEWARD, NE 68434

This drawing is an instrument of service and shall remain the property of Short Elliott Hendrickson, Inc. (SEH). This drawing, concepts and ideas contained herein shall not be used, reproduced, revised, or retained without the express written approval of SEH.

Submission or distribution of this drawing to meet official or regulatory requirements or for purposes in connection with the project is not to be construed as publication in derogation of any of the rights of SEH.

COPYRIGHT © 2024
Short Elliott Hendrickson, Inc.
All Rights Reserved

SEH Project	163917
Checked By	CJA/NJB
Drawn By	TRD
Project Status	**Issue Date**
CLIENT REVIEW	02/13/2026

REVISION SCHEDULE

REV. #	DESCRIPTION	DATE

GRADE LEVEL MECHANICAL PLAN

M101

SCHEMATIC SYMBOLS

- OS — OCCUPANCY SENSOR, CEIL MOUNT
- OS — OCCUPANCY SENSOR, WALL MOUNT
- ANTENNA
- AT MOTOR (SCHEMATIC DEVICE LOCATION)
- AT PLC (SCHEMATIC DEVICE LOCATION)
- AT MFR CP (SCHEMATIC DEVICE LOCATION)
- CONNECTION POINT
- EXTERNAL CONNECTION POINT
- GROUND
- CIRCUIT BREAKER
- DRAWOUT CIRCUIT BREAKER
- SWITCH
- FUSE
- NORMALLY OPEN PUSH-BUTTON
- NORMALLY CLOSED PUSH-BUTTON
- SELECTOR SWITCH
- POTENTIOMETER
- NORMALLY CLOSED CONTACTS
- NORMALLY OPEN CONTACTS
- FIXED CAPACITOR
- MUSHROOM HEAD PUSH-BUTTON
- NORMALLY CLOSED LIMIT SWITCH
- NORMALLY OPEN LIMIT SWITCH
- SOLENOID
- FLOAT SWITCH (OPENING ON RISING LEVEL)
- FLOAT SWITCH (CLOSING ON RISING LEVEL)
- P — SWITCH (OPENING ON INCREASE)
  P=PRESSURE
  V=VACCUM
  DP=DIFFERENTIAL PRESSURE
- P — SWITCH (CLOSING ON INCREASE)
  P=PRESSURE
  V=VACCUM
  DP=DIFFERENTIAL PRESSURE
- TEMPERATURE SWITCH (OPENING ON RISING LEVEL)
- TEMPERATURE SWITCH (CLOSING ON RISING LEVEL)
- ON TIME DELAY SWITCH (TIME DELAY AFTER COIL IS ENERGIZED)
- OFF TIME DELAY SWITCH (TIME DELAY BEFORE COIL IS ENERGIZED)
- FLOW SWITCH (OPENING ON INCREASE IN FLOW)
- FLOW SWITCH (CLOSING ON INCREASE IN FLOW)
- TORQUE SWITCH (NORMALLY CLOSED)
- TORQUE SWITCH (NORMALLY OPEN)
- ENGINE DRIVEN GENERATOR
- 15 — MOTOR- NUMBER DENOTES HORSEPOWER
- CURRENT TRANSFORMER
- POTENTIAL TRANSFORMER
- METERING DEVICE
- FUSED DISCONNECT
- MAGNETIC STARTER
- THERMAL OVERLOAD RELAY
- SURGE SUPPRESSION
- TRANSFORMER
- ALARM HORN
- K — KEY INTERLOCK
- G — PILOT LIGHT
- R1 — STARTER, CONTACTOR OR RELAY COIL

ELECTRICAL SYMBOL LEGEND

SYMBOL	DESCRIPTION
LIGHTING	
	SURFACE LIGHT (TYPE DENOTED)
	WALL MOUNTED FLOODLIGHT (TYPE DENOTED)
	RECESSED LIGHT (TYPE DENOTED)
	POLE MOUNTED LIGHT (TYPE DENOTED)
	POLE MOUNTED FLOODLIGHT (TYPE DENOTED)
	SURFACE LINEAR LIGHT (TYPE DENOTED)
	SUSPENDED OR PENDANT LIGHT (TYPE DENOTED)
	RECESSED LINEAR LIGHT (TYPE DENOTED)
	STRIP LIGHT (TYPE DENOTED)
	TRACK AND TRACK LIGHT (TYPES DENOTED)
	EMERGENCY BATTERY LIGHT (TYPE DENOTED)
	EXIT SIGN (TYPE DENOTED)
	LIGHT FIXTURE ON EMERGENCY CIRCUIT
	SINGLE POLE SW.
	2 POLE SINGLE THROW SW.
	3-WAY SW.
	4-WAY SW.
	KEYED SW.
	SW. W/PILOT
	DIMMER SWITCH
OS	OCCUPANCY SENSOR SWITCH
MS	MANUAL MOTOR STARTER SWITCH
WP	WEATHER PROOF SWITCH
	TIMER SWITCH
MC	MOMENTARY CONTACT SWITCH
TD	TIME DELAY SWITCH
OS	OCCUPANCY SENSOR - TYPE DENOTED
LS	LIGHT LEVEL SENSOR - TYPE DENOTED
PC	PHOTOCELL
SYSTEMS	
	TELEPHONE OUTLET (TYPE DENOTED)
	INFORMATION OUTLET (TYPE DENOTED)
	COMBINATION TELEPHONE/DATA OUTLET
WAP	WIRELESS ACCESS POINT
C	CLOCK (TYPE DENOTED)

SYMBOL	DESCRIPTION
POWER	
	SINGLE RECEPT.
	DUPLEX RECEPT.
	SPLIT DUPLEX RECEPT.
	ISOLATED GROUND RECEPT (DUPLEX SHOWN)
	RECEPT ON EMERGENCY CKT (DUPLEX SHOWN)
	QUADPLEX RECEPT.
	QUADRAPLEX PLEX RECEPTACLE ON EMERGENCY CIRCUIT
	FLOOR RECEPT. (DUPLEX SHOWN)
	RECEPT ON DROP CORD (DUPLEX SHOWN)
	RECEPT ON CORD REEL (DUPLEX SHOWN)
	SPECIAL RECEPT. OR CONN. (SEE SCHEDULE)
	JUNCTION BOX (WALL MOUNTED)
	JUNCTION BOX (FLOOR MOUNTED)
	HALFTONE SYMBOL INDICATES EXISTING
	DASHED SYMBOL INDICATES REMOVED
	MULTIOUTLET ASSEMBLY (TYPE DENOTED)
P	POWER POLE (OPEN OFFICE STYLE)
	STATIC GROUND RECEPTACLE (TYPE DENOTED)
	LIGHTNING PROTECTION AIR TERMINAL
	GROUND ROD (PLAN VIEW)
P	UTILITY SERVICE POWER POLE (SITE)
	CIRCUIT BREAKER PANEL
	POWER OR DISTRIBUTION PANEL
	TRANSFORMER (TYPE DENOTED)
XX-1	MOTOR (SEE SCHEDULE)
	COMB. MOTOR STARTER (FUSED)
	SAFETY DISC. SW. (NON-FUSED)
	SAFETY DISC. SW. (FUSED)

SYMBOL	DESCRIPTION
SECURITY	
CR	CARD READER
DC	DOOR CONTACT
MD	MOTION DETECTOR
	CCTV
	CCTV-PTZ
FIRE ALARM	
* =	FACP (FIRE ALARM CONTROL PANEL) FAA (FIRE ALARM ANNUNCIATOR) FAGM (FIRE ALARM GRAPHIC MAP) PACP (PRE-ACTION CONTROL PANEL)
* =	F (MANUAL PULL STATION) FD (FIRE DAMPER) F/S (FIRE/SMOKE DAMPER) SD (SMOKE DAMPER) M (MAGNETIC DOOR HOLDER) RT (REMOTE TEST STATION & PILOT LIGHT) V (VISUAL) I OR Z (INDIVIDUAL ADDRESSABLE MODULE) WHERE X: C (CONTROL TYPE) M (MONITOR TYPE) S (SUPERVISORY)
* =	F (FLOW SWITCH) T (TAMPER SWITCH) P/V (POST INDICATOR VALVE)
* =	A (AUDIBLE) H (HORN) AV (AUDIBLE & VISUAL) WHERE X: X (CANDELA RATING)
* =	D (DUCT DETECTOR) H (HEAT) S (SMOKE) F (FLAME DETECTOR) IR (INFRA-RED) MF (MULTI SPECTRUM FLAME) S (SMOKE DETECTOR) I (IONIZATION) P (PHOTOELECTRIC) H (HEAT DETECTOR) R (RATE OF RISE) F (FIXED TEMPERATURE)

SYMBOL	DESCRIPTION
INSTRUMENTATION	
XX = PS	(PRESSURE SWITCH) SV (SOLENOID VALVE) LS (LIMIT SWITCH) L (FLOAT SWITCH) FS (FLOW SWITCH) FD (FLOOR FLOOD FLOAT SWITCH) T (THERMOSTAT) MV (MOTORIZED VALVE)
XX = PT	(PRESSURE TRANSMITTER) LT (LEVEL TRANSMITTER) LE (LEVEL ELEMENT) FT (FLOW TRANSMITTER) FM (FLOW METER ELEMENT) TT (TEMPERATURE TRANSMITTER) AT (ANALYZER) AE (ANALYZER ELEMENT) MV (MODULATING MOTORIZED VALVE)
WIRING AND GROUNDING	
	CONDUIT EXPOSED
	CONDUIT CONCEALED
	CONDUIT CAPPED
	CONDUIT CONTINUED
	GROUND CONDUCTOR
OH	OVERHEAD ELECTRICAL LINE
EE	DIRECT BURIED CONDUIT

ELECTRICAL SYMBOL NOTES

- FIXTURE TYPE
- A2 b — SWITCH DESIGNATION
- 12 — CIRCUIT NUMBER
- E — FIXTURE TYPE
- 14 — CHEVRON DIRECTION
- SHADE = EXIT FACE
- CIRCUIT NUMBER
- 16 — CIRCUIT NUMBER
- d — SWITCH IDENTIFICATION

PANELBOARD IDENTIFICATION

EQUIPMENT DESIGNATION	CODE
3Ø4W. 480Y/277V	PP
3Ø3W. 480	P
3Ø4W. 208Y/120V	LP
1Ø3W. 240/120V	L

SYSTEMS DESIGNATION	CODE
NORMAL	(BLANK)
EMERGENCY	E
UNINTERRUPTIBLE POWER SOURCE	U

SYSTEM DESIGNATION — EQUIPMENT DESIGNATION — FLOOR OF STRUCTURE — PANEL NUMBER

LPE-102

ELECTRICAL ABBREVIATIONS LIST

1P	1 POLE (2P, 3P, 4P, ETC.)	CTR	CENTER	HT	HEIGHT	NEMA	NATIONAL ELECTRICAL MANUFACTURER'S ASSOCIATION	SWBD	SWITCHBOARD
A	AMPERE	CU	COPPER	HTG	HEATING			SYM	SYMMETRICAL
AC	ABOVE COUNTER OR AIR CONDITIONER	DCP	DOMESTIC WATER CIRCULATING PUMP	HTR	HEATER	NFDS	NON-FUSED SAFETY DISCONNECT SWITCH	SYS	SYSTEM
		DEPT	DEPARTMENT	HV	HIGH VOLTAGE			TEL	TELEPHONE
ACLG	ABOVE CEILING	DET	DETAIL	HVAC	HEATING, VENTILATING AND AIR CONDITIONING	NIC	NOT IN CONTRACT	TEL/DATA	TELEPHONE/DATA
ADO	AUTOMATIC DOOR OPENER	DIA	DIAMETER			NL	NIGHT LIGHT	TERM	TERMINAL
AF	AMP FRAME	DISC	DISCONNECT	HWP	HYDRONIC WATER PUMP	N.O.	NORMALLY OPEN	TL	TWIST LOCK
AFF	ABOVE FINISHED FLOOR	DIST	DISTRIBUTION	IC	INTERRUPTING CAPACITY	NPF	NORMAL POWER FACTOR	TR	TAMPER RESISTANT
AFG	ABOVE FINISHED GRADE	DN	DOWN	IG	ISOLATED GROUND	NTS	NOT TO SCALE	T-STAT	THERMOSTAT
AFI	ARC FAULT CIRCUIT INTERRUPTER	DPR	DAMPER	IMC	INTERMEDIATE METAL CONDUIT	OH	OVERHEAD	TTC	TELEPHONE TERMINAL CABINET
		DS	SAFETY DISCONNECT SWITCH	INCAND	INCANDESCENT	OL	OVERLOADS	TV	TELEVISION
AHU	AIR HANDLING UNIT	DT	DOUBLE THROW	IR	INFRARED	PA	PUBLIC ADDRESS	TVTC	TELEVISION TERMINAL CABINET
AL	ALUMINUM	DWG	DRAWING	I/W	INTERLOCK WITH	PB	PULL BOX OR PUSHBUTTON	TYP	TYPICAL
ALT	ALTERNATE	EC	ELECTRICAL CONTRACTOR	J-BOX	JUNCTION BOX	PE	PNEUMATIC ELECTRIC	UC	UNDER COUNTER
AMP	AMPERE	ELEC	ELECTRIC, ELECTRICAL	KV	KILOVOLT	PED	PEDESTAL	UE	UNDERGROUND ELECTRICAL
AMPL	AMPLIFIER	ELEV	ELEVATOR	KVA	KILOVOLT-AMPERE	PF	POWER FACTOR	UG	UNDERGROUND
ANNUN	ANNUNCIATOR	EM	EMERGENCY	KVAR	KILOVOLT-AMPERE REACTIVE	PH	PHASE	UH	UNIT HEATER
APPROX	APPROXIMATELY	EMS	ENERGY MANAGEMENT SYSTEM	KW	KILOWATT	PIV	POST INDICATING VALVE	UT	UNDERGROUND TELEPHONE
AQ.STAT	AQUASTAT	EMT	ELECTRICAL METALLIC TUBING	KWH	KILOWATT HOUR	PNL	PANEL	UTIL	UTILITY
ARCH	ARCHITECT, ARCHITECTURAL	EP	ELECTRIC PNEUMATIC	LOC	LOCATE OR LOCATION	PP	POWER POLE	UV	UNIT VENTILATOR OR ULTRAVIOLET
AS	AMP SWITCH	EQUIP	EQUIPMENT	LT	LIGHT	PR	PAIR		
AT	AMP TRIP	EWC	ELECTRIC WATER COOLER	LTG	LIGHTING	PRI	PRIMARY	V	VOLT
ATS	AUTOMATIC TRANSFER SWITCH	EXIST	EXISTING	LTNG	LIGHTNING	PROJ	PROJECTION	VA	VOLT-AMPERES
AUTO	AUTOMATIC	EXH	EXHAUST	LV	LOW VOLTAGE	PRV	POWER ROOF VENTILATOR	VDT	VIDEO DISPLAY TERMINAL
AUX	AUXILIARY	EXP	EXPLOSION PROOF	MAX	MAXIMUM	PT	POTENTIAL TRANSFORMER	VERT	VERTICAL
AV	AUDIO VISUAL	FA	FIRE ALARM	MAG.S	MAGNETIC STARTER	PVC	POLYVINYL CHLORIDE (CONDUIT)	VFD	VARIABLE FREQUENCY DRIVE
AWG	AMERICAN WIRE GAUGE	FABP	FIRE ALARM BOOSTER POWER SUPPLY PANEL	M/C	MOMENTARY CONTACT	PWR	POWER	VOL	VOLUME
BATT	BATTERY			MC	MECHANICAL CONTRACTOR	QUAN	QUANTITY	W	WATT
BD	BOARD	FACP	FIRE ALARM CONTROL PANEL	MCB	MAIN CIRCUIT BREAKER	RCPT	RECEPTACLE	W/	WITH
BLDG	BUILDING	FCU	FAN COIL UNIT	MCC	MOTOR CONTROL CENTER	REQD	REQUIRED	WG	WIRE GUARD
BMS	BUILDING MANAGEMENT SYSTEM	FIXT	FIXTURE	MDC	MAIN DISTRIBUTION CENTER	RM	ROOM	WH	WATER HEATER
C	CONDUIT	FLR	FLOOR	MDP	MAIN DISTRIBUTION PANEL	RSC	RIGID STEEL CONDUIT	W/O	WITHOUT
CAB	CABINET	FLUOR	FLUORESCENT	MFR	MANUFACTURER	RTU	ROOF TOP UNIT	WP	WEATHERPROOF
CAT	CATALOG	FU	FUSE	MFS	MAIN FUSED DISCONNECT SWITCH	SC	SURFACE CONDUIT	XFMR	TRANSFORMER
CATV	CABLE TELEVISION	FUDS	FUSED SAFETY DISCONNECT SWITCH	MH	MANHOLE	SEC	SECONDARY	XFR	TRANSFER
CB	CIRCUIT BREAKER	GA	GAUGE	MIC	MICROPHONE	SHT	SHEET		
CCTV	CLOSED CIRCUIT TELEVISION	GAL	GALLON	MIN	MINIMUM	SIM	SIMILAR		
CKT	CIRCUIT	GALV	GALVANIZED	MISC	MISCELLANEOUS	S/N	SOLID NEUTRAL		
CLG	CEILING	GC	GENERAL CONTRACTOR	MLO	MAIN LUGS ONLY	SPEC	SPECIFICATION	∠	ANGLE
COMB	COMBINATION	GEN	GENERATOR	MMS	MANUAL MOTOR STARTER	SPKR	SPEAKER	@	AT
CMPR	COMPRESSOR	GFI	GROUND FAULT CIRCUIT INTERRUPTER	MOA	MULTIOUTLET ASSEMBLY	SP	SPARE	▲	DELTA
CONN	CONNECTION	GFP	GROUND FAULT PROTECTOR	MSP	MOTOR STARTER PANELBOARD	SR	SURFACE RACEWAY	'	FEET
CONST	CONSTRUCTION	GND	GROUND	MSBD	MAIN SWITCHBOARD	SS	STAINLESS STEEL	"	INCHES
CONT	CONTINUATION OR CONTINUOUS	GRS	GALVANIZED RIGID STEEL (CONDUIT)	MT	MOUNT	SSW	SELECTOR SWITCH	#	NUMBER
CONTR	CONTRACTOR	GYP BD	GYPSUM BOARD	MT.C	EMPTY CONDUIT	S/S	STOP/START PUSHBUTTONS	Ø	PHASE
CONV	CONVECTOR	HOA	HANDS-OFF-AUTOMATIC SWITCH	MTS	MANUAL TRANSFER SWITCH	STA	STATION	C	CENTER LINE
CP	CIRCULATING PUMP	HORIZ	HORIZONTAL	MTR	MOTOR, MOTORIZED	STD	STANDARD	P	PLATE
CRT	CATHODE-RAY TUBE	HP	HORSEPOWER	N.C.	NORMALLY CLOSED	SURF	SURFACE MOUNTED		
CT	CURRENT TRANSFORMER	HPF	HIGH POWER FACTOR	NEC	NATIONAL ELECTRICAL CODE	SW	SWITCH		

THIS BAR IS INTENDED TO BE 1" PRINTED AT FULL SCALE — 2/10/2026 4:20:15 PM

SEH

NOT FOR CONSTRUCTION

Project Owner
SEWARD NEBRASKA

SEWARD, NEBRASKA
METERING MANHOLE AND SAMPLING BUILDING

2846-2886 WALKER ROAD
SEWARD, NE 68434

This drawing is an instrument of service and shall remain the property of Short Elliott Hendrickson, Inc. (SEH). This drawing, concepts and ideas contained herein shall not be used, reproduced, revised, or retained without the express written approval of SEH.

Submission or distribution of this drawing to meet official or regulatory requirements or for purposes in connection with the project is not to be construed as publication in derogation of any of the rights of SEH.

COPYRIGHT © 2024
Short Elliott Hendrickson, Inc.
All Rights Reserved

SEH Project	163917
Checked By	JPC
Drawn By	JRB

Project Status	**Issue Date**
CLIENT REVIEW	02/13/2026

REVISION SCHEDULE

REV. #	DESCRIPTION	DATE

ELECTRICAL SYMBOLS, ABBREVIATIONS AND NOTES

E001

GENERAL NOTES:

1. SEE 1-LINE DIAGRAM E501 FOR CONDUIT AND CONDUCTOR SIZES.

KEYNOTES:

1. COORDINATE ELECTRICAL SERVICE REQUIREMENTS WITH LOCAL ELECTRICAL UTILITY.
2. APPROXIMATE LOCATION OF BURIED CIRCUITRY. VERIFY ROUTING WITH UTILITY, OTHER TRADES AND CIVIL PLANS.
3. PROVIDE HANDHOLE WITH CONDUIT TO RTU-1 AND STUB-OUT FOR FIBER PROVIDER CONNECTION. COORDINATE FIBER ROUTING, RACEWAY AND FIBER OPTIC CABLE CONNECTION AND REQUIREMENTS WITH FIBER PROVIDER.

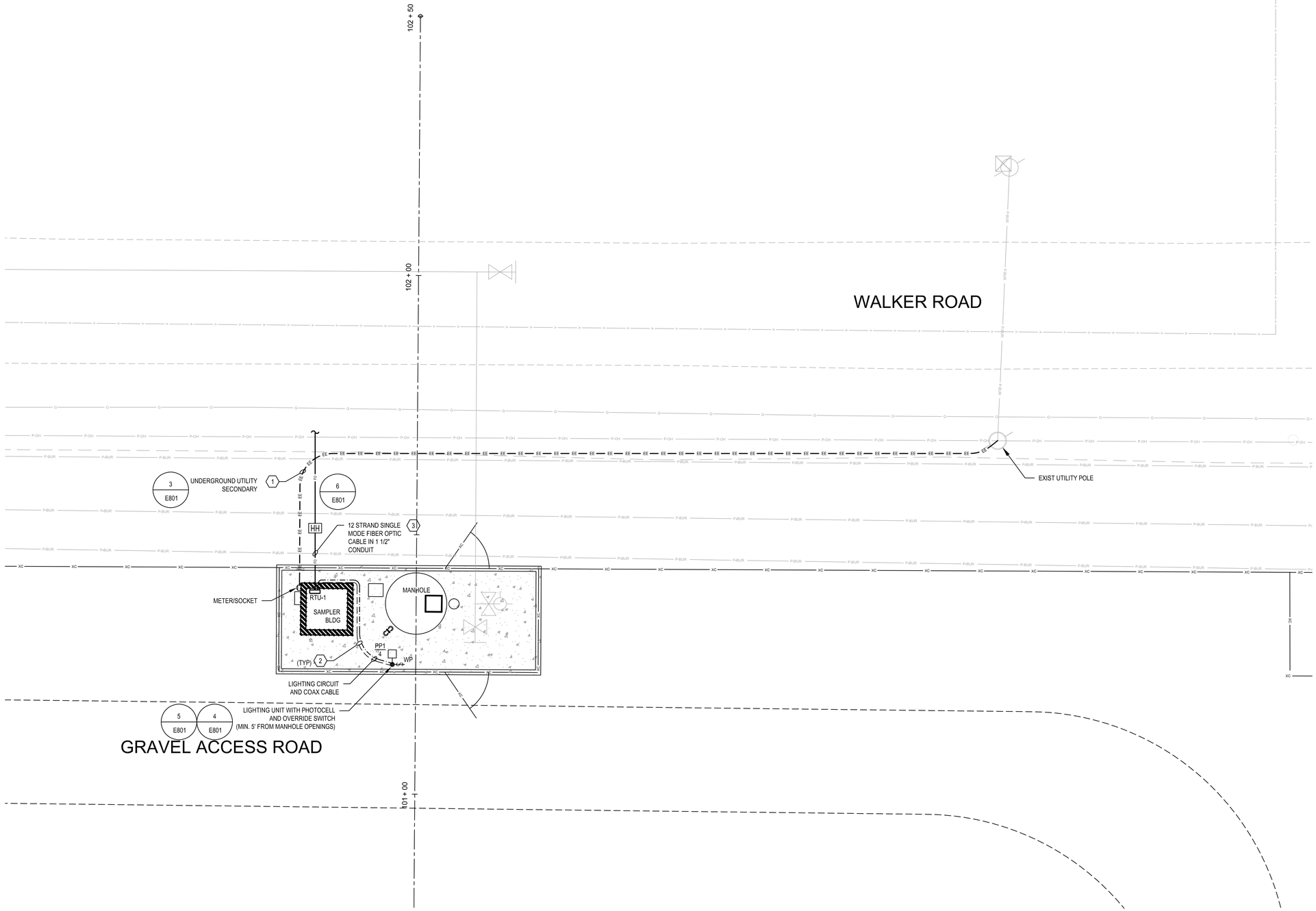

1/10 ELECTRICAL - SITE PLAN

SCALE: 1"=5'

0 5 10

SCALE IN FEET

PROJECT NORTH

SEH

NOT FOR CONSTRUCTION

SEWARD NEBRASKA

SEWARD, NEBRASKA
METERING MANHOLE AND SAMPLING BUILDING

2846-2886 WALKER ROAD
SEWARD, NE 68434

This drawing is an instrument of service and shall remain the property of Short Elliott Hendrickson, Inc. (SEH). This drawing, concepts and ideas contained herein shall not be used, reproduced, revised, or retained without the express written approval of SEH.

Submission or distribution of this drawing to meet official or regulatory requirements or for purposes in connection with the project is not to be construed as publication in derogation of any of the rights of SEH.

COPYRIGHT © 2024
Short Elliott Hendrickson Inc.
All Rights Reserved

SEH Project	SEWAC 163917
Checked By	JPC
Drawn By	JRB

Project Status	**Issue Date**
CLIENT REVIEW	02/13/2026

REVISION SCHEDULE

REV. #	DESCRIPTION	DATE

ELECTRICAL - SITE PLAN

E101

Save: 2/10/2026 4:11 PM jbrummel Plot: 2/10/2026 4:36 PM X:\PT\S\SEWAC\163917\5-final-sdsgn\51-drawings\35-Elec\INDUSTRIAL PARK SAMPLING BLDG\E101 ELECTRICAL - SITE PLAN.dwg

KEYNOTES

1. ~~COMBUSTIBLE GAS DETECTION SYSTEM~~ CONTROLLER CGD-1, CGD-2, AIT-1, AIT-2 AND LIT-1 MOUNTED APPROX. 60"AFG AND WEATHERPROOF.
2. MOUNT H2S SENSORS AT 12"AFF IN BLDG, 12" ABOVE HIGH WATER MARK IN MANHOLE AND CONNECT TO CORRESPONDING CONTROLLER.
3. MOUNT CH4 SENSORS AT 12" BELOW CEILING AND CONNECT TO CORRESPONDING CONTROLLER.
4. LIGHT FIXTURE TYPE V2: LITHONIA: FEM L48 4000LM IMAFL MD MVOLT 40K 80CRI, SURFACE MOUNTED 4' LED VAPORPROOF, ACRYLIC, LINEAL RIBBED FROSTED LENS, 3,790 LUMENS, 24 WATT.
5. LIGHT FIXTURE TYPE X3: HOLOPHANE: HRLL 8L GG AS WL, WALL MOUNTED CL.1, DIV. 1 LED, PRISMATIC GLASS GLOBE, GUARD (EXPLOSION PROOF), 8,800 LUMENS, 94 WATT.

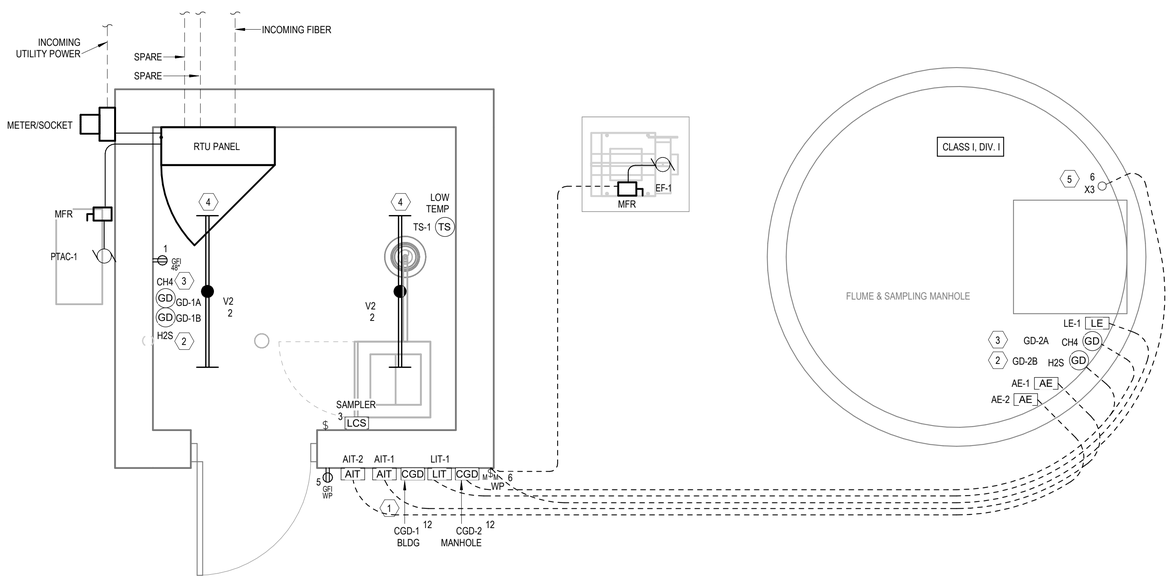

1 E301 LEVEL 1 POWER PLAN

1/2" = 1'-0"

0 1' 2' 4'

PROJECT NORTH

THIS BAR IS INTENDED TO BE 1" PRINTED AT FULL SCALE 2/10/2026 4:20:16 PM

SEH

NOT FOR CONSTRUCTION

Project Owner

SEWARD NEBRASKA

SEWARD, NEBRASKA
METERING MANHOLE AND SAMPLING BUILDING

2846-2886 WALKER ROAD
SEWARD, NE 68434

This drawing is an instrument of service and shall remain the property of Short Elliott Hendrickson, Inc. (SEH). This drawing, concepts and ideas contained herein shall not be used, reproduced, revised, or retained without the express written approval of SEH.

Submission or distribution of this drawing to meet official or regulatory requirements or for purposes in connection with the project is not to be construed as publication in derogation of any of the rights of SEH.

COPYRIGHT © 2024
Short Elliott Hendrickson, Inc.
All Rights Reserved

SEH Project	163917
Checked By	JPC
Drawn By	JRB

Project Status	**Issue Date**
CLIENT REVIEW	02/13/2026

REVISION SCHEDULE

REV. #	DESCRIPTION	DATE

ELECTRICAL PLAN

E301

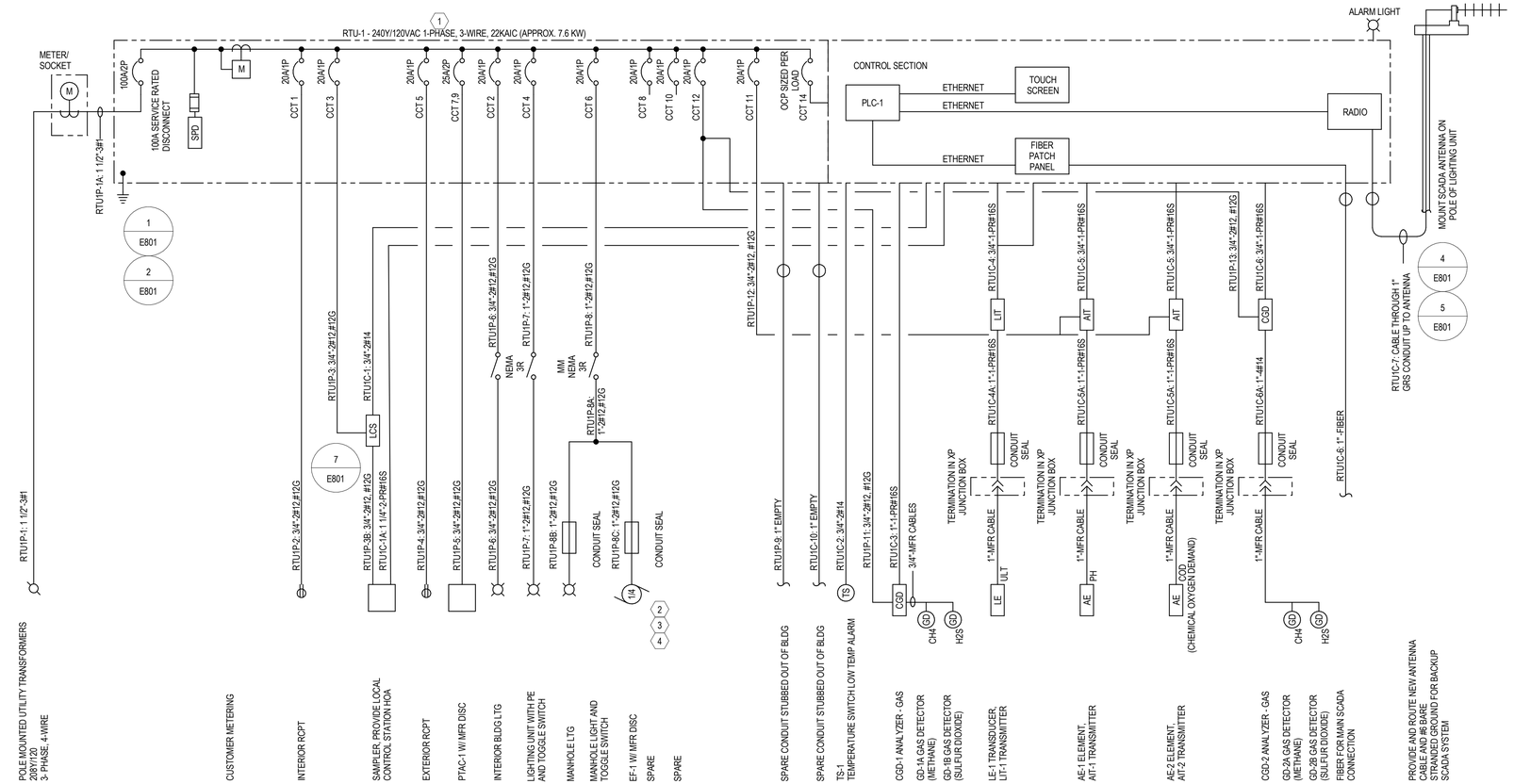

1 / E501 RTU-1 ONE-LINE DIAGRAM

NOT TO SCALE

KEYNOTES

1. CONTRACTOR SHALL CONTACT UTILITY AND PROVIDE ARC FLASH AND AVAILABLE FAULT CURRENT LABELING ON EQUIPMENT PER NEC 110.16 AND 110.24.
2. PROVIDE LED AREA LUMINAIRE, LITHONIA: DSX1 LED P4 40K T4M MVOLT RPA DBLXD. DESCRIPTION: 14,182 LUMENS,125 WATTS, TYPE 4, PAINTED BLACK. AIM LUMINAIRE TO CENTER OF MANHOLE AND BLDG.
3. PROVIDE 16' ROUND ALUMINUM POLE, LITHONIA: RSA 16 4C DM19AS TP DBLXD. DESCRIPTION: PAINTED DARK BLACK, GALVANIZED ANCHOR BOLTS. MOUNT ON LIGHTING UNIT FOUNDATION PER DETAIL 4/E801.
4. PROVIDE SCADA ANTENNA 20' AFG. FASTEN TO TOP OF LIGHT POLE WITH 6' OF RGS CONDUIT AND HARDWARE ALL PAINTED DARK BLACK. INSTALL WEATHERPROOF SEALS ON POLE CAP TO ROUTE COAX CABLE AND GROUND WIRE THROUGH POLE . VERIFY HEIGHT REQUIREMENTS WITH OWNER.

SEH

NOT FOR CONSTRUCTION

Project Owner

SEWARD NEBRASKA

SEWARD, NEBRASKA
METERING MANHOLE AND SAMPLING BUILDING

2846-2886 WALKER ROAD
SEWARD, NE 68434

This drawing is an instrument of service and shall remain the property of Short Elliott Hendrickson, Inc. (SEH). This drawing, concepts and ideas contained herein shall not be used, reproduced, revised, or retained without the express written approval of SEH.

Submission or distribution of this drawing to meet official or regulatory requirements or for purposes in connection with the project is not to be construed as publication in derogation of any of the rights of SEH.

COPYRIGHT © 2024
Short Elliott Hendrickson, Inc.
All Rights Reserved

SEH Project	163917
Checked By	JPC
Drawn By	JRB

Project Status	**Issue Date**
CLIENT REVIEW	02/13/2026

REVISION SCHEDULE

REV. #	DESCRIPTION	DATE

ONE-LINE DIAGRAM

E501

THIS BAR IS INTENDED TO BE 1" PRINTED AT FULL SCALE 2/10/2026 4:20:16 PM

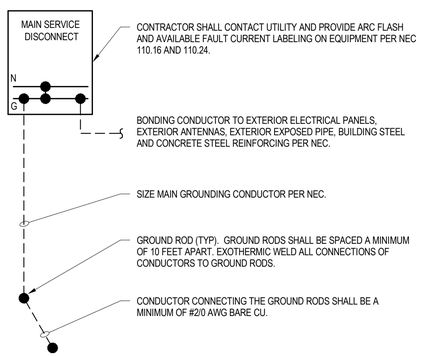

1 E801 BONDING AND GROUNDING 2 ROD
NOT TO SCALE

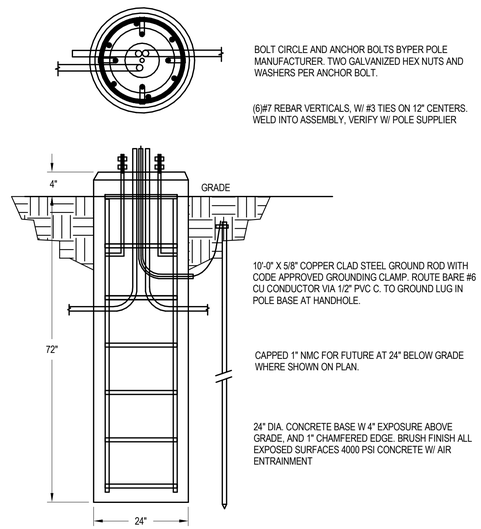

4 E801 SHORT LIGHTING BASE
NOT TO SCALE

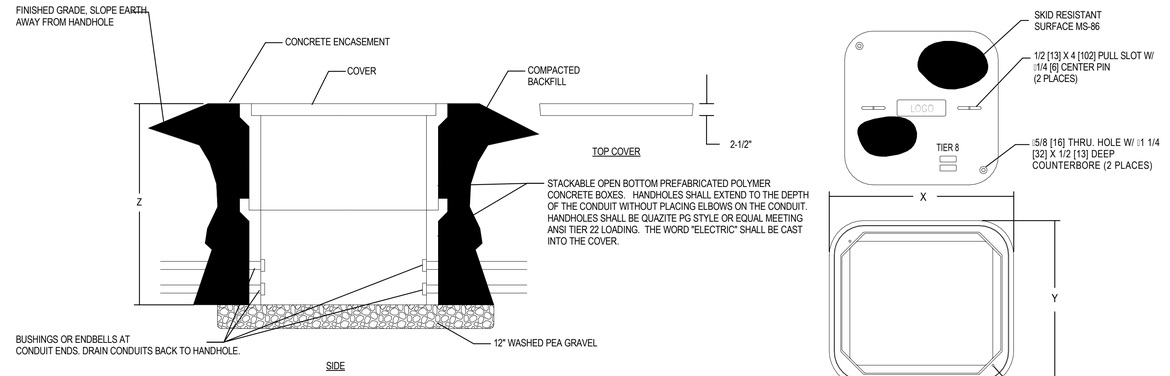

NOTES:

1. ALL HANDHOLES SHALL BE INSTALLED AT DEPTH TO SIT FLUSH WITH FINAL GRADE. DEPTH TO BE 30" OR AS REQUIRED. MINIMUM SIZE HANDHOLES ARE SHOWN, PROVIDE LARGER BOXES AS REQUIRED.
2. ALL HANDHOLES SHALL BE UL LISTED AND BE SUITABLE FOR TIER 22 LOADING. FOR AREAS OF DELIBERATE HEAVY VEHICLE TRAFFIC, HANDHOLES SHALL BE SUITABLE FOR TIER 32 LOADING.
3. ALL HANDHOLES SHALL BE EQUAL TO QUAZITE SERIES PG OR APPROVED EQUAL.
4. ALL HANDHOLES SHALL BE GASKETED, PRECAST CONCRETE OR POLYMER COMPOSITE SPLICE BOXES SUITABLE FOR POWER AND CONTROL WIRING. PROVIDE ALL HANDHOLES WITH BASES AND STAINLESS STEEL HEX BOLTS.
5. E.C. SHALL PROVIDE CRUSHED STONE AT BASE OF HANDHOLE.
6. ALL HANDHOLES TO BE SIZED PER NEC REQUIREMENTS FOR THE CONDUITS ENTERING THEM. MINIMUM SIZE SHALL BE 36"W X 24"L X 30"D UNLESS NOTED OTHERWISE ON THE PLAN SHEETS.
7. PROVIDE COVER ENGRAVING; "ELECTRIC" FOR 480V AND 120V POWER, "COMMUNICATIONS" FOR COMMUNICATION WIRING AND "CONTROL" FOR CONTROL WIRING.

6 E801 HANDHOLE
NOT TO SCALE

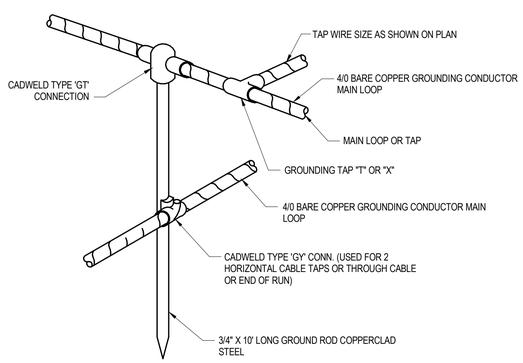

2 E801 GROUND ROD CONNECTION
NOT TO SCALE

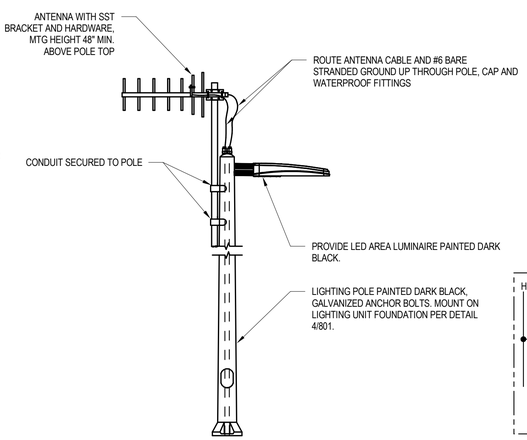

5 E801 LIGHTING & SCADA UNIT
NOT TO SCALE

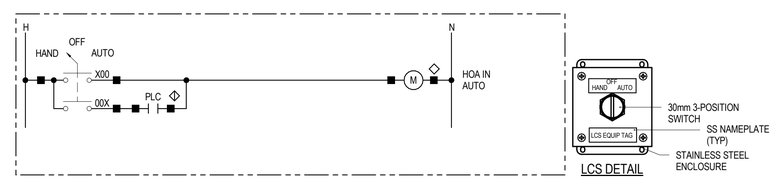

7 E801 SAMPLER- HOA SCHEMATIC
NOT TO SCALE

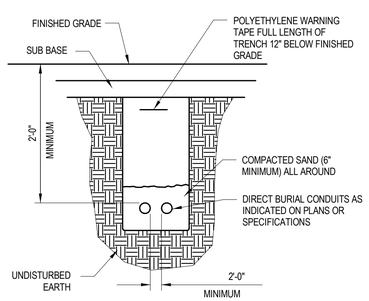

NOTES:

1. BACKFILL OF SELECT COMMON FILL COMPACTED IN LIFTS OF 6" (DEPTH VARIES)

3 E801 DIRECT-BURIED CONDUIT
NOT TO SCALE

THIS BAR IS INTENDED TO BE 1" PRINTED AT FULL SCALE 2/10/2026 4:20:16 PM

SEH

NOT FOR CONSTRUCTION

Project Owner
SEWARD NEBRASKA

SEWARD, NEBRASKA
METERING MANHOLE AND SAMPLING BUILDING

2846-2886 WALKER ROAD
SEWARD, NE 68434

This drawing is an instrument of service and shall remain the property of Short Elliott Hendrickson, Inc. (SEH). This drawing, concepts and ideas contained herein shall not be used, reproduced, revised, or retained without the express written approval of SEH.

Submission or distribution of this drawing to meet official or regulatory requirements or for purposes in connection with the project is not to be construed as publication in derogation of any of the rights of SEH.

COPYRIGHT © 2024
Short Elliott Hendrickson Inc.
All Rights Reserved

SEH Project	163917
Checked By	JPC
Drawn By	JRB

Project Status	**Issue Date**
CLIENT REVIEW	02/13/2026

REVISION SCHEDULE

REV. #	DESCRIPTION	DATE

ELECTRICAL DETAILS

E801

3. Consideration of a Recommendation to Award a Construction Contract for the Seward Industrial Substation Expansion Project to Jolma Utilities LLC in the Amount of $2,878,989 - Electric Superintendent Hochstein

BID FORM FOR CONSTRUCTION CONTRACT

The terms used in this Bid with initial capital letters have the meanings stated in the Instructions to Bidders, the General Conditions, and the Supplementary Conditions.

ARTICLE 1—OWNER AND BIDDER

1.01 This Bid is submitted to: The City of Seward, Nebraska

1.02 The undersigned Bidder proposes and agrees, if this Bid is accepted, to enter into an Agreement with Owner in the form included in the Bidding Documents to perform all Work as specified or indicated in the Bidding Documents for the prices and within the times indicated in this Bid and in accordance with the other terms and conditions of the Bidding Documents.

ARTICLE 2—ATTACHMENTS TO THIS BID

2.01 The following documents are submitted with and made a condition of this Bid:

A. Required Bid Security;

B. List of Proposed Subcontractors;

C. List of Proposed Suppliers;

D. Evidence of authority to do business in the state of the Project; or a written covenant to obtain such authority within the time for acceptance of Bids;

E. Contractor's license number as evidence of Bidder's State Contractor's License or a covenant by Bidder to obtain said license within the time for acceptance of Bids;

F. Required Bidder Qualification Statement with supporting data.

ARTICLE 3—BASIS OF BID—LUMP SUM BID AND/OR UNIT PRICES

3.01 *Unit Price Bids:*

A. Bidder will perform the following Work at the indicated unit prices:

Item No.	Description	Unit	Estimated Quantity	Bid Unit Price	Bid Amount
Total of All Unit Price Bid Items	$				

Complete in Quest

B. Bidder acknowledges that:

1. each Bid Unit Price includes an amount considered by Bidder to be adequate to cover Contractor's overhead and profit for each separately identified item, and

Copyright© 2018 National Society of Professional Engineers, American Council of Engineering Companies, and American Society of Civil Engineers. All rights reserved.

2. estimated quantities are not guaranteed and are solely for the purpose of comparison of Bids, and final payment for all Unit Price Work will be based on actual quantities, determined as provided in the Contract Documents.

ARTICLE 4—TIME OF COMPLETION

4.01 Bidder agrees that the Work will be substantially complete and will be completed and ready for final payment in accordance with Paragraph 15.06 of the General Conditions on or before the dates or within the number of calendar days indicated in the Agreement.

4.02 Bidder accepts the provisions of the Agreement as to liquidated damages.

ARTICLE 5—BIDDER'S ACKNOWLEDGEMENTS: ACCEPTANCE PERIOD, INSTRUCTIONS, AND RECEIPT OF ADDENDA

5.01 *Bid Acceptance Period*

A. This Bid will remain subject to acceptance for **60 days** after the Bid opening, or for such longer period of time that Bidder may agree to in writing upon request of Owner.

5.02 *Instructions to Bidders*

A. Bidder accepts all of the terms and conditions of the Instructions to Bidders, including without limitation those dealing with the disposition of Bid security.

5.03 *Receipt of Addenda*

A. Bidder hereby acknowledges receipt of the following Addenda:

Addendum Number	Addendum Date
NONE	

ARTICLE 6—BIDDER'S REPRESENTATIONS AND CERTIFICATIONS

6.01 *Bidder's Representations*

A. In submitting this Bid, Bidder represents the following:

1. Bidder has examined and carefully studied the Bidding Documents, including Addenda.
2. Bidder has visited the Site, conducted a thorough visual examination of the Site and adjacent areas, and become familiar with the general, local, and Site conditions that may affect cost, progress, and performance of the Work.
3. Bidder is familiar with all Laws and Regulations that may affect cost, progress, and performance of the Work.
4. Bidder has carefully studied the reports of explorations and tests of subsurface conditions at or adjacent to the Site and the drawings of physical conditions relating to existing surface or subsurface structures at the Site that have been identified in the Supplementary Conditions, with respect to the Technical Data in such reports and drawings.

Copyright© 2018 National Society of Professional Engineers, American Council of Engineering Companies, and American Society of Civil Engineers. All rights reserved.

5. Bidder has carefully studied the reports and drawings relating to Hazardous Environmental Conditions, if any, at or adjacent to the Site that have been identified in the Supplementary Conditions, with respect to Technical Data in such reports and drawings.

6. Bidder has considered the information known to Bidder itself; information commonly known to contractors doing business in the locality of the Site; information and observations obtained from visits to the Site; the Bidding Documents; and the Technical Data identified in the Supplementary Conditions or by definition, with respect to the effect of such information, observations, and Technical Data on (a) the cost, progress, and performance of the Work; (b) the means, methods, techniques, sequences, and procedures of construction to be employed by Bidder, if selected as Contractor; and (c) Bidder's (Contractor's) safety precautions and programs.

7. Based on the information and observations referred to in the preceding paragraph, Bidder agrees that no further examinations, investigations, explorations, tests, studies, or data are necessary for the performance of the Work at the Contract Price, within the Contract Times, and in accordance with the other terms and conditions of the Contract.

8. Bidder is aware of the general nature of work to be performed by Owner and others at the Site that relates to the Work as indicated in the Bidding Documents.

9. Bidder has given Engineer written notice of all conflicts, errors, ambiguities, or discrepancies that Bidder has discovered in the Bidding Documents, and of discrepancies between Site conditions and the Contract Documents, and the written resolution thereof by Engineer is acceptable to Contractor.

10. The Bidding Documents are generally sufficient to indicate and convey understanding of all terms and conditions for performance and furnishing of the Work.

11. The submission of this Bid constitutes an incontrovertible representation by Bidder that without exception the Bid and all prices in the Bid are premised upon performing and furnishing the Work required by the Bidding Documents.

6.02 *Bidder's Certifications*

A. The Bidder certifies the following:

1. This Bid is genuine and not made in the interest of or on behalf of any undisclosed individual or entity and is not submitted in conformity with any collusive agreement or rules of any group, association, organization, or corporation.

2. Bidder has not directly or indirectly induced or solicited any other Bidder to submit a false or sham Bid.

3. Bidder has not solicited or induced any individual or entity to refrain from bidding.

4. Bidder has not engaged in corrupt, fraudulent, collusive, or coercive practices in competing for the Contract. For the purposes of this Paragraph 8.02.A:

a. Corrupt practice means the offering, giving, receiving, or soliciting of anything of value likely to influence the action of a public official in the bidding process.

b. Fraudulent practice means an intentional misrepresentation of facts made (a) to influence the bidding process to the detriment of Owner, (b) to establish bid prices at

Copyright© 2018 National Society of Professional Engineers, American Council of Engineering Companies, and American Society of Civil Engineers. All rights reserved.

artificial non-competitive levels, or (c) to deprive Owner of the benefits of free and open competition.

c. Collusive practice means a scheme or arrangement between two or more Bidders, with or without the knowledge of Owner, a purpose of which is to establish bid prices at artificial, non-competitive levels.

d. Coercive practice means harming or threatening to harm, directly or indirectly, persons or their property to influence their participation in the bidding process or affect the execution of the Contract.

Copyright© 2018 National Society of Professional Engineers, American Council of Engineering Companies, and American Society of Civil Engineers. All rights reserved.

BIDDER hereby submits this Bid as set forth above:

Bidder:

Jolma Utilities, LLC
(typed or printed name of organization)

By: _____
(individual's signature)

Name: Sean Hallstrom
(typed or printed)

Title: Substation Dept Manager
(typed or printed)

Date: 2/26/26
(typed or printed)

If Bidder is a corporation, a partnership, or a joint venture, attach evidence of authority to sign.

Attest: _____
(individual's signature)

Name: Ryan Jolma
(typed or printed)

Title: Owner/CEO
(typed or printed)

Date: 2/26/26
(typed or printed)

Address for giving notices:
49905 State Hwy 13, Ashland, WI 54806

Bidder's Contact:

Name: Sean Hallstrom
(typed or printed)

Title: Substation Dept Manager
(typed or printed)

Phone: 952-649-3838

Email: seanh@jolmautilities.com

Address:
49905 State Hwy 13, Ashland, WI 54806

Bidder's Contractor License No.: (if applicable) 11866-26

Copyright© 2018 National Society of Professional Engineers, American Council of Engineering Companies, and American Society of Civil Engineers. All rights reserved.

LIST OF PROPOSED SUBCONTRACTORS

Veit & Company, Inc
14000 Veit Place
Rogers, MN 55374
Phone: 763-428-2242
Contact: Mike Quicksell

American Fence Company
3301 North 35th Street
Lincoln, NE 68504
Phone: 402-467-2511
Contact: Connor Goode

LIST OF PROPOSED SUPPLIERS

Border States Electric Supply
4451 Airpark Blvd
Duluth, MN 55811
Phone: 218.727.8170

Irby Utilities
12501 Dupont Ave S
Burnsville MN 55337
Phone: 763.259.9402

Viking Electric Supply
Po Box 7411039
Chicago, IL 60674
Phone: 218.336.1351

Medium Voltage Accessory Supply
5458 Lamar St
Arvado, CO 80002
Phone: 303.425.6111

Graybar
2601 W Superior St
Duluth, MN 55806
Phone: 218.529.2155

JRK Steel
5900 Main Street
Duluth, MN 55807
Phone: 218.624.5793

NEBRASKA

Good Life. Great Connections.

DEPARTMENT OF LABOR

Contractor Registration Certificate

This certificate is non-transferable

Registration # 11866-26

Date Expiring: 1/18/2027

Jolma Utilities LLC
Jolma Utilities LLC
63946 Hangard Road
Ashland, WI 54806

Nebraska Department of Labor
550 South 16th Street
Lincoln, NE 68508
402-471-2239

Commissioner of Labor

REBID Seward Industrial Substation Expansion (#10045249)
Owner: City of Seward, Nebraska
Solicitor: Olsson, Inc. (Lincoln, NE)
02/26/2026 03:00 PM CST

					Engineer Estimate		Jolma Utilities LLC	
Section Titl	Line Item	Item Code	Item Descr	UofM	Quantity	Unit Price	Extension	Unit Price	Extension
Base Bid							$0.00		$2,878,989.00
	1	1	34.5-12.47	ea	1			$14,988.00	$14,988.00
	2	2	SS PMH-10	ea	4			$3,059.00	$12,236.00
	3	3	12.47kV Re	ea	4			$2,797.00	$11,188.00
	4	4	12,470-12(	ea	1			$2,415.00	$2,415.00
	5	5	12.47kV Po	ea	3			$2,966.00	$8,898.00
	6	6	12.47kV Po	ea	3			$994.00	$2,982.00
	7	7	34.5kV 600	ea	3			$1,501.00	$4,503.00
	8	8	34.5kV 600	ea	3			$1,214.00	$3,642.00
	9	9	15.5kV 120	ea	1			$23,470.00	$23,470.00
	10	10	15.5kV 120	ea	1			$3,386.00	$3,386.00
	11	11	15.5kV 120	ea	6			$2,157.00	$12,942.00
	12	12	15.5kV 120	ea	6			$1,890.00	$11,340.00
	13	13	14.4kV 120	ea	9			$1,467.00	$13,203.00
	14	14	14.4kV 120	ea	9			$1,830.00	$16,470.00
	15	15	14.4kV 600	ea	12			$771.00	$9,252.00
	16	16	14.4kV 600	ea	12			$1,259.00	$15,108.00
	17	17	14.4kV 600	ea	18			$773.00	$13,914.00
	18	18	14.4kV 600	ea	18			$1,257.00	$22,626.00
	19	19	15kV, 100A	ea	1			$509.00	$509.00
	20	20	15kV, 100A	ea	1			$1,258.00	$1,258.00
	21	21	Stranded B	lot	1			$179,122.00	$179,122.00
	22	22	500MCM A	ft	500			$6.00	$3,000.00
	23	23	Rigid Bus Ir	lot	1			$92,250.00	$92,250.00
	24	24	Aluminum	ft	450			$22.80	$10,260.00
	25	25	Aluminum	ft	100			$30.60	$3,060.00
	26	26	Undergrou	lot	1			$15,166.00	$15,166.00
	27	27	35kV Distri	lot	1			$38,356.00	$38,356.00
	28	28	35kV Termi	ea	3			$2,298.00	$6,894.00
	29	29	15kV Distri	lot	1			$51,306.00	$51,306.00
	30	30	15kV Termi	ea	13			$1,094.00	$14,222.00
	31	31	Animal Gu	lot	1			$7,280.00	$7,280.00
	32	32	Lighting Pr	lot	1			$77,495.00	$77,495.00
	33	33	250kV BIL	ea	3			$1,131.00	$3,393.00
	34	34	150kV BIL	ea	57			$846.00	$48,222.00
	35	35	10kV, 8.4k	ea	13			$141.00	$1,833.00
	36	36	12.47kV Bu	ea	1			$12,967.00	$12,967.00
	37	37	12.47kV Bu	ea	1			$5,300.00	$5,300.00
	38	38	12.47kV Re	ea	2			$48,873.00	$97,746.00
	39	39	12.47kV Re	ea	2			$22,544.00	$45,088.00
	40	40	12.47kV Di	ea	1			$32,729.00	$32,729.00
	41	41	12.47kV Di	ea	1			$22,530.00	$22,530.00

42	42	34.5kV Swi	ea	1		$15,843.00	$15,843.00
43	43	34.5kV Swi	ea	1		$6,625.00	$6,625.00
44	44	Lighting Br	ea	2		$2,158.00	$4,316.00
45	45	Arresters	ea	13		$141.00	$1,833.00
46	46	Arrester Ins	ea	13		$414.00	$5,382.00
47	47	Power Met	ea	1		$20,494.00	$20,494.00
48	48	Power Met	ea	1		$8,614.00	$8,614.00
49	49	Concrete C	ft	101		$212.00	$21,412.00
50	50	Concrete C	lot	1		$45,738.00	$45,738.00
51	51	Above Grac	lot	1		$34,141.00	$34,141.00
52	52	Above Grac	lot	1		$26,507.00	$26,507.00
53	53	Below Grac	lot	1		$48,444.00	$48,444.00
54	54	Below Grac	lot	1		$100,900.00	$100,900.00
55	55	Ground Gri	lot	1		$43,736.00	$43,736.00
56	56	Ground Gri	ft	2500		$9.00	$22,500.00
57	57	Ground Ro	ea	7		$81.00	$567.00
58	58	Ground Gri	lot	1		$10,064.00	$10,064.00
59	59	Equipment	lot	1		$4,091.00	$4,091.00
60	60	Steel Grou	lot	1		$19,732.00	$19,732.00
61	61	Fence Gro	lot	1		$4,295.00	$4,295.00
62	62	2'x3' Steel	ea	1		$1,602.00	$1,602.00
63	63	Structure G	lot	1		$5,475.00	$5,475.00
64	64	Concrete,	lot	1		$11,127.00	$11,127.00
65	65	Concrete,	lot	1		$55,262.00	$55,262.00
66	66	Concrete,	lot	1		$25,800.00	$25,800.00
67	67	Concrete,	lot	1		$8,595.00	$8,595.00
68	68	Concrete,	lot	1		$63,880.00	$63,880.00
69	69	Piers Instal	lot	1		$451,592.00	$451,592.00
70	70	Transforme	lot	1		$522,240.00	$522,240.00
71	71	PT 1 Panel	lot	1		$1,425.00	$1,425.00
72	72	PT 1 Panel	lot	1		$1,988.00	$1,988.00
73	73	PT 2 Panel	ea	1		$7,348.00	$7,348.00
74	74	PT 2 Panel	lot	1		$7,291.00	$7,291.00
75	75	AC 1 Panel	lot	1		$2,051.00	$2,051.00
76	76	AC 1 Panel	lot	1		$1,657.00	$1,657.00
77	77	AC 2 Panel	lot	1		$7,026.00	$7,026.00
78	78	AC 2 Panel	lot	1		$12,793.00	$12,793.00
79	79	Low Voltag	lot	1		$77,570.00	$77,570.00
80	80	Low Voltag	lot	1		$159,180.00	$159,180.00
81	81	Rock Surfa	cu yd	290		$96.00	$27,840.00
82	82	Misc Seedi	lot	1		$9,464.00	$9,464.00
Base Bid Total:					$0.00		$2,878,989.00

NOTICE OF AWARD

Date of Issuance:	March 3, 2026		
Owner:	City of Seward, Nebraska	Owner's Project No.:	N/A
Engineer:	Olsson, Inc.	Engineer's Project No.:	024-05881
Project:	Seward Industrial Substation Expansion		
Contract Name:	Agreement Between Owner and Contractor for Construction Contract		
Bidder:	Jolma Utilities LLC		
Bidder's Address:	49905 State Hwy 13, Ashland, WI 54806		

You are notified that Owner has accepted your Bid dated March 3, 2026, for the above Contract, and that you are the Successful Bidder and are awarded a Contract for:

- Install 34.5kV and 12.74KV medium voltage equipment and conductor
- Install relevant low voltage signal and power cables and equipment such as potential signals, current signals, and AC power.
- Install foundations, grounding, conduit, and other below grade items as required.
- Install structures and foundations as required.
- Procure contractor supplied equipment and structures to meet engineer specifications.
- All apparatuses shall be field tested in accordance with ANSI/NETA ATS-2025:
    - Optional tests not required, but may be required based on bidders provided justification
    - Reference the one line for the major equipment and relaying items for testing and commissioning

The Contract Price of the awarded Contract is **$2,878,989**. Contract Price is subject to adjustment based on the provisions of the Contract, including but not limited to those governing changes, Unit Price Work, and Work performed on a cost-plus-fee basis, as applicable.

One (1) copy of unexecuted counterparts of the Agreement accompany this Notice of Award, and one copy of the Contract Documents accompanies this Notice of Award or has been transmitted or made available to Bidder electronically.

☐ Drawings will be delivered separately from the other Contract Documents.

You must comply with the following conditions precedent within 15 days of the date of receipt of this Notice of Award:

1. Deliver to Owner one (1) of counterparts of the Agreement, signed by Bidder (as Contractor).
2. Deliver with the signed Agreement(s) the Contract security (such as required performance and payment bonds) and insurance documentation, as specified in the Instructions to Bidders and in the General Conditions, Articles 2 and 6.
3. Other conditions precedent (if any): None.

Failure to comply with these conditions within the time specified will entitle Owner to consider you in default, annul this Notice of Award, and declare your Bid security forfeited.

Within 10 days after you comply with the above conditions, Owner will return to you one fully signed counterpart of the Agreement, together with any additional copies of the Contract Documents as indicated in Paragraph 2.02 of the General Conditions.

Copyright© 2018 National Society of Professional Engineers, American Council of Engineering Companies, and American Society of Civil Engineers. All rights reserved.

Owner: **City of Seward, Nebraska**

By *(signature)*: _____

Name *(printed)*: _____

Title: _____

Copy: Engineer

Copyright© 2018 National Society of Professional Engineers, American Council of Engineering Companies, and American Society of Civil Engineers. All rights reserved.

4. Consideration of Various Amendments to the Employee Handbook Dated August 15, 2023 - City Clerk Bargmann

EMPLOYEE HANDBOOK

CITY OF SEWARD

P.O. Box 38, 537 Main Street, Seward, Nebraska 68434. Phone: 402-643-2928. Fax: 402-643-6491. www.CityofSewardNE.gov

ADOPTED BY CITY COUNCIL
AUGUST 15, 2023

Last Update: DECEMBER 3, 2024

Our City promotes genuine community spirit by providing friendly quality services to people who live, work, and play in Seward.

TABLE OF CONTENTS (click below to link to section)

Section 1: Method of Meeting Staffing Needs
1.1 Classification of Employees 2
1.2 Procedure for Staffing City Departments 2
1.3 Conditional Offer Phase of Hiring Process 5
1.4 Reinstatement of Previous Employees....5
1.5 Introductory/Evaluation Period 5
Section 2: Employee Responsibilities and Conduct
2.1 Standards for Appearance 7
2.2 Attendance 7
2.3 Complaint Policy 8
2.4 Personal Business 9
2.5 Cell Phone Usage 9
2.6 Outside Employment 9
2.7 Political Activity 9
2.8 Social Media Usage 9
2.9 Care and Use of City Property 10
2.9.3 Controlled Substances & Alcohol Testing Procedure 12
2.10 Safety 15
2.11 Personnel Records 16
2.12 Peddling, Solicitation, Etc. 17
2.13 Conflict of Interest 17
2.14 Gratuities 17
2.15 Sexual Harassment Policy 18
2.16 No Discrimination or Harassment Policy 19
2.17 Workplace Violence 20
Section 3: Compensation of Employees
3.1 Pay Plan Structure 21
3.2 Pay Plan Step Placement 21
3.2a Working Out of Classification 21
3.3 Pay Plan Maintenance 22
3.4 Annual Performance Pay 22
3.5 Longevity Pay 22
3.6 Recording of Work Hours 22
~~3.7 Pay Period Compensation ....23~~3.7 Pay Period Compensation (including Overtime; Termination) 23
3.8 Other Instances of Employee Compensation 24
3.8.1 Compensatory Time 24
3.8.2 On Call Time Situations 25
3.8.3 Call Back Time 26
3.9 Instances of Employee Reimbursement 26
Section 4: Employee Benefits
4.1 Holiday/Annual Personal Leave 28
4.2 Vacation Leave 28
4.3 Sick Leave – Including Leave for Injury 30
4.3.1a Parental Leave 31
4.4 Other Granted Paid Leave 33
4.4.1 Admin Leave 34
4.4.2 Funeral Leave 35
4.5 Instances of Approved Unpaid Leave 36
4.5.2 Family and Medical Leave (FMLA) 36
4.6 Health/Retirement Benefits 38
Section 5: Employee Development
5.1 Employee Orientation 39
5.2 Employee Development 39
5.2.1 Conferences and Education 39
5.3 Employee Evaluations 41
5.4 Employee Awards Program 43
Section 6: Employee Discipline and Separation from Employ
6.1 Corrective and Disciplinary Actions 44
6.2 Separation from Employment 46
Section 7: Employee Appeals
7.1 Procedure 49
Attachment A: **Definitions**
Attachment B: **Organizational Chart**
Attachment C: **Updates to Handbook Tracking**

INTRODUCTION TO EMPLOYEE HANDBOOK

The Mayor and City Council (Council) of the City of Seward, Nebraska (City) shall be the ultimate policy-making authority for the City in all matters pertaining to personnel administration. These policies, practices, or procedures included herein shall become effective when adopted by the Council. Upon adoption, the employee handbook shall supersede all previous or conflicting personnel policies, rules, regulations, and procedures adopted by the Council. The handbook shall apply to all departments, divisions and employees of the City except in cases of conflict with applicable City ordinances, state or federal laws or regulations or with the rules of the City of Seward Civil Service Commission as statutorily applicable.

Copies of the handbook shall be issued to all employees as part of new hire orientation. A current copy will be on file in the Human Resource Director's office and will be made available on the City website. It is the duty of each employee to read, understand, and comply with all provisions of the Handbook. It is your obligation to treat all citizens fairly, ethically, and with special privileges to none.

The purpose of this handbook is to serve as a written statement of the basic personnel policies, practices, and procedures of the City, which affect employment matters. This Handbook is not an exhaustive list of every workplace policy, practice, or procedure, but rather a guide to employees on commonly raised questions. Although the City has attempted to cover matters of general applicability to employees, no employee handbook can anticipate every circumstance or question about policy. The City, with approval of Council, reserves the right to revise, supplement or rescind any policies or portion of this Handbook as it deems appropriate, at any time, in its sole and absolute discretion, and to interpret these policies and procedures in its sole and absolute discretion. Employees will, of course, be notified of such changes to the Handbook as they occur.

The contents of this handbook are presented as a matter of information only and do not constitute an expressed or implied contract of employment between employee and the City. Nothing in this handbook is intended to nor should be construed to create a contract or guarantee of employment. Permanent employment or employment for a specific term is neither guaranteed nor promised to any employee of the City.

CITY'S COMMITMENT TO EEO, AA, AND ADA

The City affirms its commitment to equal employment opportunity (EEO) by providing a work environment that does not discriminate in employment opportunities or practices on the basis of race, color, religion, sex (including pregnancy, sexual orientation or gender identity), national origin, age, disability, marital status, military status, genetic information or any other prohibited basis of discrimination protected by law, will not be tolerated. The City also affirms its commitment to affirmative action (AA) to base all employment decisions only on valid job requirements. These policies shall apply to all aspects of employment actions, including recruitment, selection, job assignment, promotion, transfer, evaluation, discipline, termination, compensation, benefits, and selection for training, at all levels of employment.

The City abides by the requirements of the Americans with Disabilities Act (ADA), the ADA Amendment Act, and state laws governing employment of individuals with disabilities. Qualified individuals with disabilities may be entitled to an accommodation in the application process and/or in the workplace. Any qualified individual with a disability who requires reasonable accommodation in the employment process and/or in the workplace shall notify the City Administrator. The City will reasonably accommodate qualified individuals with a disability so that they can perform the essential functions of a job unless doing so causes a direct threat to these individuals or others in the workplace and the threat cannot be eliminated by reasonable accommodation or if the accommodation creates an undue hardship to the City.

SECTION 1: METHOD OF MEETING STAFFING NEEDS

1.1 Classification of Employees

For purposes of salary administration, overtime, and benefits, the City of Seward classifies its employees as follows:

A. ***Introductory Employee***. An introductory employee is classified as an employee that has not completed their introductory evaluation period as specified in **Section 1.5**. Introductory employees are not yet eligible for retirement benefits but are eligible immediately for overtime, medical insurance, and leave benefits if they are a ~~full-time~~ qualifying employee. ~~An employee in this classification will be subject to establishment of performance evaluation goals each April 1st and October 1st.~~

B. ***Regular Full-Time Employee***. An employee who has completed the introductory period and is expected to work 40 hours per week. The employee may be considered exempt (salaried) or non-exempt (hourly, overtime eligible), depending on how their classified position is indicated in the job description. This classification of employees is eligible for City benefits—leave, retirement, medical—as identified in Section 4. An employee in this classification will be subject to ~~establishment of~~ performance evaluation ~~goals~~ each April 1st and October 1st.

C. ***Regular Part-Time Employee***. An employee who has completed the introductory period and is expected to work between 20-29 hours per week on average. The employee will be classified as non-exempt (hourly) and will be eligible for overtime and leave benefits only as identified in Section 4. An employee in this classification will be subject to ~~establishment of~~ performance evaluation ~~goals~~ each April 1st and October 1st.

D. ***Part-Time Employee***. An employee who will not complete an introductory period and is expected to work less than 20 hours per week on average. The employee will be classified as non-exempt (hourly) and will be eligible for overtime, but ~~leave benefits only as identified in~~will not be eligible for any benefits identified in Section 4. An employee in this classification will not be subject to ~~the establishment of~~ performance evaluation ~~goals~~.

E. ***Seasonal Employee***. An employee who is hired temporarily for a specified period of time. The employee will not complete an introductory period and is expected to work up to 40 hours a week. This classification of employee must average less than 30 hours a week for the calendar year. ~~for a specified period of time~~. The employee will be classified as non-exempt (hourly) and will not be eligible for any benefits identified in Section 4. Employees of the outdoor pool are not eligible for overtime due to FLSA Section 13(a)(3) exemption; however, if staff have multiple positions and the combined hours at exceed 40 hours in a week, overtime will be calculated. An employee in this classification will not be subject to ~~the establishment of~~ performance evaluation ~~goals~~.

1.2 Procedure for Staffing City Departments

Department Heads shall notify the City Administrator and Human Resources Director as soon as they become aware of actual or impending vacancies within their Department. The hiring process may not be undertaken without the authorization of the City Administrator, who may specify the selection process or processes to be used. If a Department Head feels the need to add an additional employee or employees, a request should be submitted and approved by the City Administrator or by the City Council if it creates a new position. The request will be considered based on current and forecasted budget availability, assessment of current and forecasted duties of the department, and in consideration with any facility or equipment upgrades to be implemented. If a vacancy is actual or impending for the role of Department Head, the City Administrator will initiate the hiring process and the chosen candidate will be appointed by the City Council.

No applicant shall be prohibited from securing employment and promotional/transfer opportunity with the City of Seward on the basis of race, color, religion, sex (including pregnancy, sexual orientation or gender identity), national origin, age, disability, marital status, military status, genetic information, or any other characteristic protected by law. Any evidence of discrimination shall be brought to the attention of the affected employee's Department Head, Human Resources Director and City Administrator, in that successive order. The City will make reasonable accommodations for the known physical or mental limitations of a qualified applicant or employee with a disability upon request unless the accommodation would cause an undue hardship on the operation of City business.

1.2.1 Selection of an Employee Currently in City Service

1.2.1a Promotion - A promotion is the assignment from a position in one class to a position in another class having a higher maximum salary. A Department Head may recommend an employee be promoted to a higher classification if the employee has demonstrated one or all of the following: efficiency in service, continued development, education, skill attainment or length of service in current position. A recommendation for promotion of a non-appointed employee shall be submitted to the City Administrator and must gain approval before initiated. City employees may apply and be considered for any vacant or newly created position but will be considered in the same manner as members of the public.

1.2.1b Transfer – A transfer is any assignment from position to another within the City, which may be considered a promotion if the employee qualifies. City employees shall have the privilege of requesting a transfer to another department at any time there exists a vacancy for which they qualify. Department Heads shall give deliberate and impartial consideration to such requests within their respective departments and should submit the request to the City Administrator for consideration and approval.

1.2.2 Competitive Selection

When a competitive selection process is to be used, the City Administrator, according to the best interest of the City, may designate the area of consideration to applications from the following:

1.2.2a The selection process may be limited to persons currently employed in the City service. If this method of filling a vacancy is chosen, advertisement of the position will be limited to internal methods only and the selection process may be governed by the promotion policy.

1.2.2b The selection process may be opened up to the general public in which case any qualified applicants are encouraged to file an application. If this method of filling a vacancy is chosen, advertisement for the position shall be coordinated through the Human Resources Director. Each vacancy announcement shall include, at a minimum the following information:

- Title and salary of the position;
- Summary of the qualifications for the position;
- Method of and deadline for filing applications; and
- A statement that the City is an equal opportunity employer

Applications shall be filed with the contact as specified in the applicable vacancy announcements. The City Administrator may authorize the acceptance of late applications if in the best interest of the City. The City shall provide reasonable assistance to persons requesting help in completing their applications. All information submitted by applicants shall be subject to verification. The City may cease accepting or processing applications at any time in accordance with operational requirements.

After the deadline for submittal, Department Heads and/or applicable Boards/Commissions, shall thoroughly screen the applications for completeness and should rank them on the basis of how well the applicant meets the hiring criteria indicated in the job advertisement. Criteria may include, but not be limited to the

following: education, experience, skills/abilities, special training and certifications. Based on the rankings developed, the Department Head or Board/Commission in coordination with the Human Resources Director shall schedule and conduct interviews with the highest-ranking candidates. Depending on the number of applications for a vacancy, it will be the intention to interview at least three applicants formally. Applicants who are interviewed shall be asked the same questions and their answered recorded in writing—any written documents, notes or tapes utilized or created in an interview will be forwarded to the Human Resources Director for retention. Applicants may be interviewed more than once if deemed necessary. Before the best candidate is identified, Department Heads or Board/Commission shall undertake the following tasks as possible: verification of previous employment, indication of performance in previous positions. Once the best candidate is identified, the Department Head or Board/Commission shall submit their recommendation to the City Administrator for consideration. If filling a vacancy for a non-appointed position, the City Administrator shall authorize the offer of the candidate deemed best qualified to fill the vacancy. If filling a vacancy for an appointed position, the City Administrator shall present a recommendation to the City Council for consideration and approval. The appointed individual will be offered the position only after City Council approval at a regular meeting.

Civil Service Rules & Regulations apply to appointing/hiring all sworn Police Department employees.

1.2.3 Non-Competitive Selection

When in the best interest of the City, a non-competitive selection process may be specified by the City Administrator. Vacancies may be non-competitively filled with qualified person by the following means:

a. Reinstatement of a former City employee;
b. Demotion for cause, as specified in 'Disciplinary Action';
c. Re-promotion of an employee previously demoted in lieu of reduction in force;
d. Lateral transfer; or
e. A selection process within the existing City service employees **(See 1.2.2a)**.

1.2.4 Disqualification of Applicants

An applicant may be disqualified from further consideration at any stage of the selection process for any of the following reasons:

a. Applicant is an illegal alien or an alien with a visa specifically precluding their working;
b. Applicant will not have attained their 18th birthday at the time of hire, except in cases where a lower minimum age has been established in the vacancy announcement;
c. Applicant is not medically qualified to perform the duties as ascertained in a manner prescribed by the City Administrator, except that disabled persons shall not be disqualified on medical grounds if their disability can reasonably be accommodated in the workplace;
d. Applicant is not of good moral character to the extent that their job performance would be impaired or that significant discredit or excessive risk would be brought upon the City by their employment;
e. Applicant is not able to meet the residential requirement of the position;
f. Employment of the applicant will violate the prohibition on the employment of relatives;
g. Employment of the applicant will create a conflict of interest situation;
h. Applicant lacks the education, experience, aptitude, or similar qualifications required for the position;

i. Applicant obtains a positive substance abuse test result during the conditional offer phase of hiring;
j. Applicant has a concerning background check result during the conditional offer phase of hiring, that would constitute an excessive risk to the City if they were employed;
k. Applicant has been or is about to be dismissed from employment or military service for reasons indicating a current unfitness for the position or constituting an excessive risk to the City if they are employed;
l. Applicant has made a false statement of material fact or has committed or attempted to commit a fraudulent, illegal, or unethical act or has attempted to exert political influence at any point in the application or selection process; or
m. Applicant will not possess any required license or certificate or will not be able to comply with any other requirement or condition of employment as specified.

1.3 Conditional Offer Phase of Hiring Process

1.3.1 Physical Fitness to Perform Job Duties

An applicant may be required to submit to a medical examination only after a conditional offer of employment and only if the examination is required of all applicants for the position. If the examination disqualifies an individual because of a disability, the examination standards shall be job-related and consistent with business necessity. An employee's medical records will be retained separate from personnel files and kept confidential in compliance with the regulations of the U.S. Equal Employment Opportunity Commission and the Nebraska Fair Employment Practice Act.

1.3.2 Drug and/or Background Testing

An applicant may be required to submit to a substance abuse test prior to employment and in adherence to **Section 2.9.3**. A background check of all prospective employees will be completed at the discretion of the City ~~Administration~~Administrator.

1.3.3 Employment of Relatives

No applicant for a regular full-time position or regular part-time position shall be considered for employment if the position for which they are applying would result in their working in the same department as a member of their immediate family. These same conditions will apply for an employee who is promoted or transferred to a position in any department which would result in working in the same department as a member of immediate family. These policies apply to all members of the immediate family of all personnel of the City. Seasonal and temporary full-time or part-time positions are exempt from this policy.

1.4 Reinstatement of Previous Employees

Employees who retired from active City employment, whether or not they are receiving pensions from funds provided by the City, shall not be eligible for active employment pay from any City department funds unless approved by the City Administrator.

An employee who is separated from service with the City and did so in good standing, either due to a resignation or the elimination of a position, may be re-employed provided that the person is qualified to perform the duties of the position. In appropriate circumstances, reinstatements following layoff shall be based on seniority, with the persons with longest total regular City service being re-employed first. The employee shall once again serve an evaluation period regardless of the employee's status prior to the separation.

An employee who is re-employed shall be given credit for one-half of the years of service from a prior employment, given the re-employment date is within three (3) years of a previous employment ending date. If such credit is equal to or greater than one-half year, such credited year(s) are rounded up to the next full year of service. If such credit is less than one-half year, such credited years are rounded down to the previous full year of service. The accrual rate for benefits will be determined using the same credit calculation. **EXAMPLES**:

#1. An employee who worked five (5) years previously would receive credit for 2.5 years, therefore, their credited service would be rounded up to three (3) years of service. **#2.** If an employee worked 2.5 years, they would receive credit for 1.25 years thus would be rounded down to one (1) year of service.

1.5 Introductory/Evaluation Period—Applicable to new, re-instated or promoted employees

All regular full-time and regular part-time employees of the City of Seward shall serve in an introductory period for the first six (6) calendar months of employment. The purpose of this is to permit the Department Head to closely observe and evaluate the capabilities and willingness of the new employee. During this time, the Department Head or Supervisor shall encourage and assist the new employee in making a successful adjustment to working for the City. Performance goals will be established for the next full period (six months) of performance goals creation, which begins in April and October annually.

For a promoted or re-instated employee (who previously completed an introductory period), an evaluation period of six (6) calendar months will be utilized for the Department Head to observe the capabilities of the employee in meeting the job requirements for the position. The Department Head and said employee shall establish performance goals at the beginning of a promotion or re-instatement period to allow for proper evaluation.

1.5.1 Failure of Introductory or Evaluation Period

At any time during the six-month introductory or evaluation period, an employee may be dismissed from the City service or may be reassigned by lateral transfer or demotion if their conduct, quality of work and/or fitness are insufficient to continue in the position. The Department Head, with the approval of the City Administrator, may provide an employee an additional period to demonstrate acceptable performance by extending the introductory or evaluation period no more than three months—failure to demonstrate acceptable performance after this extended evaluation period shall result in dismissal. The employee and Human Resources Director shall be notified if an introductory or evaluation period is extended. If an employee was promoted to the position and fails the six-month evaluation, they will be returned to their former position, if open, or may be reassigned to any other position deemed to which they qualify or may be terminated.

SECTION 2: EMPLOYEE RESPONSIBLITIES AND CONDUCT

2.1 Standards for Appearance:

As City representatives, employees should present a clean and professional appearance when in contact with other employees, elected officials, and members of the public. Employees are expected to use good judgement and common sense in choosing their workday attire. It is the intent of the City of Seward that any dress code standards created hereunder shall not discriminate against any employee based on race, color, religion, sex (including pregnancy, sexual orientation or gender identify), national origin, age, disability, marital status, military status, genetic information or any other protected class under the law. If the employee would request an accommodation based on any of the preceding factors, they should discuss the need with their immediate supervisor and/or the City Administrator. Instances of violation will be reported in the following order based on seriousness: immediate supervisor, Department Head, City Administrator or proper authorities.

2.1.1 General Workday Attire

Generally, all employees will dress in a manner that projects a professional, neat, business-appropriate appearance. With the prior approval of the City Administrator, Department Heads may have the ability to create different dress codes for their entire department, or within certain divisions, and even by certain work locations or sites. Several factors will be considered by the City Administrator in considering the request for an alternative dress code, including, but not limited to:

- The nature of the assigned work tasks and job assignments;
- whether such employee will be working primarily indoors or outdoors;
- federal, state and local safety regulations and requirements;
- interactions and meetings with the public, business agents, elected officials, and other officers.

Certain employees may be provided with uniforms and other City equipment, tools, and safety gear as needed to successfully complete job tasks.

2.1.2 Casual Workday Attire

Casual dress day may be observed by some departments on a designated day of every week, for a holiday or at any specified time by the City Administrator. An employee's participation in casual dress day is optional. Employees should not participate in any casual dress day when that employee has a scheduled meeting or presentation in which such casual dress wear would not be business or task-appropriate. Generally, on designated days these guidelines should be followed:

- No attire that is ripped, torn or has holes
- No attire that is unduly revealing and/or provocative
- No attire that is not appropriate for the task being performed for that day
- No attire that portrays a negative image or has inappropriate advertising or logos (eg. Drugs or alcohol related materials, obscene or inappropriate portrayals or pictures).

2.2 Attendance

Employees shall promptly be in attendance at their place of work in accordance with the policies regarding hours of work, holidays and leave. Work hours shall be established by the Department Head and be approved by the City Administrator beforehand. If a department's regular work hours are altered, employees will be notified a minimum of 14 calendar days before the incorporated change.

If an employee, for some unavoidable reason, cannot report for work, the employee shall notify their supervisor or Department Head in advance of the first normal duty hour; in addition, if an employee has to leave work during the day for some unavoidable reason, they shall notify their Department Head or supervisor before they leave. Failure on the part of an employee to comply with these policies shall be cause for disciplinary action.

2.2a Break Periods

A fifteen-minute break period will be allowed to employees of the City during each one-half day of work (typically 4 hours) for relaxation from the regular routine of duty. With the exception of the Police and Library personnel, an employee scheduled for an 8-hour shift will be allowed one meal period each workday. The meal period will be at least thirty (30) minutes but no longer than one (1) hour in length and will be scheduled to accommodate operating requirements of the Department. Employees will be relieved of all active responsibilities and restrictions during meal periods and will not be compensated for that time. Department Heads have the ability, on a case-by-case basis, to amend these requirements from time to time with approval of the City Administrator. Police and Library personnel are not relieved of all active responsibilities and restrictions and consequently may be compensated for mealtime.

The City shall provide reasonable break time for an employee to express breast milk for her nursing child for one year after the child's birth each time such employee has need to express the milk; and a place, other than a bathroom, that is shielded from view and free from intrusion from coworkers and the public, which may be used by the employee to express breast milk. If possible, such break time should be taken concurrently to the break time already provided to the employee. Department Heads have the ability, on a case-by-case basis, to amend these requirements from time to time with approval of the City Administrator.

2.3 Complaint Policy

In situations where an employee feels a work-related complaint in regard to policy and handbook implementation is in order **(See Section 7)**, the following steps should be taken:

2.3.1a If an employee believes that they have a legitimate work-related complaint, the employee is encouraged to first attempt to resolve the issue(s) with their Department Head. The complaint shall be presented in writing, on forms available at City Hall to their Department Head within five (5) business days from time of incident. The complaint shall clearly state the basis for the complaint and the relief requested. The Department Head will review the complaint and respond to the employee in writing within five (5) business days of receipt.

2.3.1b An employee remaining dissatisfied after receiving response from the Department Head may then submit the complaint to the City Administrator within five (5) business days after receiving response. The City Administrator will then review and respond within five (5) business days of receiving the complaint. Meetings may be held with employee, the Human Resources Department, and any other employee to discuss the complaint and remedy.

2.3.2a If a Department Head believes that they have a legitimate work-related complaint, the Department Head is encouraged to first attempt to resolve the issue(s) with the City Administrator. The complaint shall be presented in writing, on forms available at City Hall to the City Administrator within five (5) business days from time of incident. The complaint shall clearly state the basis for the complaint and the relief requested. The City Administrator will review the complaint and respond to the Department Head in writing within five (5) business days of receipt.

2.3.2b A Department Head remaining dissatisfied after receiving response from the City Administrator may then submit the complaint to the Mayor within five (5) business days from that date. The Mayor will investigate utilizing any or all of the following tools – written summary of the complaint, a review of the City Administrator's response, and/or consultation with the City Labor Attorney - and respond within ten (10) business days of receiving the complaint. Meetings may be held with employee, City Administration, and the Human Resources Department to discuss the complaint and remedy. After the investigation is completed, the Mayor

or City Attorney will advise the employee in writing of the results of their investigation and decision. The decision on the complaint shall be final and binding.

Time limits will strictly be enforced. Late submission of a complaint at any stage of the procedure shall bar its consideration unless there are extenuating circumstances. Similarly, if a Department Head or the City Administrator should fail to provide a written response within five (5) business days of receipt of complaint, the employee shall be allowed to advance their request to the next higher authority.

2.4 Personal Business

While on duty, personal phone calls (both incoming and outgoing), appointments and visitors should be conducted at break times or avoided unless absolutely necessary.

2.5 Cell Phone Usage

While at work, employees are expected to exercise the same discretion in using personal cell phones and electronic devices as is expected for the use of city phones. Excessive texting and personal calls during the workday, regardless of the phone or device used, can interfere with employee and department productivity and can be distracting to others. Employees are encouraged to text and make any other personal calls on non-work time where possible and to ensure that friends and family members are aware this policy.

Where workload needs demand immediate access to an employee, the City may issue a cell phone or other electronic device for work related communications, or a fee arrangement may be made to have the employee carry their own cell phone on an agreed upon schedule. As requested, the employee may be asked to produce this cell phone or electronic device for immediate return or inspection.

All employees are expected to follow applicable state or federal laws or regulations regarding the use of cell phones or other electronic devices. Employees whose jobs responsibilities include regular or occasional driving as a part of the workday shall refrain from texting or using the keypad while driving. Safety must come before all other concerns. Bring the vehicle to a safe stop before texting or using the keypad of the cell phone or electronic device.

Where possible, hands-free equipment will be provided with city issued phones and other electronic devices to facilitate the provisions of usage.

2.6 Outside Employment

Employees of the City of Seward may take occasional or part-time jobs if there is no conflict with normal working hours; the employee's efficiency in his work is not hampered; or conflict with the interests of the City do not arise. The employee shall complete an "*Outside Employment Form*" and advise their Department Head of the nature of the outside employment, hours involved, and any other appropriate information prior to acceptance of the outside employment. The Department Head shall then recommend to the City Administrator or appropriate authority whether the outside employment should be approved. Outside employment by City employees shall not be authorized unless first approved by the City Administrator or appropriate authority. In any situation wherein extra duty will be necessary in an employee's normal City work, such extra duty shall be in preference to his outside employment.

2.7 Political Activity

No employee shall be prohibited from participating in political activities except during work hours or when otherwise engaged in the performance of his or her official duties. No employee shall engage in any political activity while wearing a City uniform or wearing clothing denoting themself as a City of Seward employee

2.8 Social Media Usage

Employees shall refrain from using social media while on work time, unless it is work-related as authorized by the Department Head or consistent with the Cell Phone, Computer and Internet Services policy. Employees shall not use the City of Seward's email addresses to register on social networks, blogs or other online tools utilized for personal use.

2.8.1. General Social Media Use

The City of Seward takes no position on an employee's decision to start or maintain a blog or to participate in other social networking activities. However, it is the right and duty of the City to protect itself from unauthorized disclosure of confidential information and information expressly exempted from Nebraska's public records laws. Unless specifically instructed, employees are not authorized and therefore are restricted from speaking on behalf of the City. Employees may not publicly discuss confidential information or information expressly exempted from Nebraska's public records laws outside of City-authorized communications. Employees are expected to protect privileged data. For example, employees, vendors, or clients are prohibited from disclosing personal employee and non-employee information and any other proprietary and nonpublic information to which employees have access. Such information includes but is not limited to citizen financial information, legal process information, and personnel issues.

Employees are cautioned that they should have no expectation of privacy while using the internet. Postings can be reviewed by anyone, including City staff. The City reserves the right to monitor comments or discussions about the City, its employees, vendors, and contractors posted on the internet by anyone, including employees and non-employees. The City may use blog-search tools and software to monitor forums such as blogs and other types of personal journals, diaries, personal and business discussion forum, and social networking sites.

Employees are cautioned that they should have no expectation of privacy while using City equipment or facilities for any digital purpose. The City reserves the right to use content management tools to monitor, review or block content on city blogs that violate City blogging rules and guidelines.

2.8.2. Authorized Social Media Use on Behalf of the City

Only authorized employees can prepare and modify content for the City of Seward website and/or the social networking entries located on the web. Content must be relevant, add value and meet at least one of the specific goals or purposes developed by the City. If uncertain about any information, material, or conversation, discuss the content with the respective Department Head and/or City ~~Administration~~Administrator. Access to City-owned social media sites will be discontinued upon resignation or termination of an employee who posts on behalf of the City.

Any copyrighted information where written reprint information has not been obtained in advance cannot be posted by an authorized employee.

2.9 Care and Use of City Property

Employees shall be responsible for the proper care and use of all City property entrusted or available to them. Employees damaging or losing City property through negligence or abuse shall be subject to disciplinary action and may be required to reimburse the City for such damage or loss. City equipment, keys, materials, and supplies shall not be used for private purposes and shall not be removed from authorized locations without proper supervisory approval. Employees leaving the City service shall return any tools, uniforms, keys, or other City property issued to them before receiving their final pay.

At no time will any employee or member of the public be allowed to use/borrow City equipment, or place or park their own personal vehicle in a City owned garage, shop or building. (This includes parking on city premises to change oil, wash vehicles, etc.)~~.~~ City employees shall only be entitled to utilize and borrow City-owned equipment and facilities as per the policies of general use from the public.

2.9.1 Smoke Free Policy

\~~Smoking by the public and City employees shall be prohibited in all municipal buildings and vehicles.~~ The City recognizes that smoking in confined spaces can adversely affect other employees. Accordingly, smoking and vaping are prohibited at all times in

municipal buildings and vehicles, even if no other passengers are present. Smokers have an obligation to keep outdoor City property litter-free and not to abuse break rules. Employees who violate this policy will be subject to disciplinary action.

Smokeless tobacco is permitted on City property as it poses no adverse effect on others. Use of smokeless tobacco should not distract the employee from conducting their expected duties. Tobacco users have an obligation to keep City facilities and vehicles clear of their debris and may face disciplinary action if they do not.

2.9.2 Guidelines for Computers & Internet Services

The City of Seward recognizes the need for computers and technology services to provide a productive professional work environment and will provide the necessary equipment to conduct such business. Computers and internet services are provided by the City of Seward to support open communications and exchange of information and the opportunity for collaborative government-related work. During business hours, computer use and internet communications to and from City employees and with outside entities, are presumed to be work-related. Although access to information and information technology is essential to the missions of government agencies and their users, use of computers and internet services is a revocable privilege. Abuse of the internet access provided by the City in violation of law or City policy will result in disciplinary action, up to and including termination of employment. Employees may be held personally liable for any violations of this policy. The following guidelines have been established to help ensure responsible and productive Internet usage.

All Internet data composed, transmitted, or received via the City's computer communications systems is subject to disclosure to law enforcement and other third parties. Employees should always ensure that the information contained in Internet e-mail messages and other transmissions is accurate, appropriate, ethical, and lawful.

City computers and data stored in them are the property of the City and may be accessed at any time by authorized City officials. The equipment, services, and technology provided to access the internet offered by the City remain at all times property of the City. As such, the City reserves the right to monitor internet traffic, and retrieve and read any data composed, sent, or received through their online connections and stored in their computer systems. Employees should not expect privacy in the use of City computers.

Data that is composed, transmitted, accessed, or willingly received via the Internet must not contain content that could be considered discriminatory, offensive, obscene, threatening, harassing, intimidating or disruptive to any employee or other person, except in the cases necessary for the performance of a specific job-related duty. Examples of unacceptable content may include, but are not limited to sexual comments or images, racial slurs, gender-specific comments or any other comments or images that could reasonably offend someone on the basis of race, color, age, sex/gender, religious or political beliefs, military status, national origin, disability, sexual orientation, marital status, pregnancy, genetic information, gender identity or any other characteristic protected by law.

The unauthorized use, installation, copying or distribution of copyrighted, trademarked, or patented material on the Internet is expressly prohibited. As a general rule, if an employee did not create material, does not own the rights to it, or has not gotten authorization for its' use, it should not be put on the Internet. Employees are also responsible for ensuring that the person sending any material over the Internet has the appropriate distribution rights.

The Internet is full of useful programs that can be downloaded, but some of them may contain computer viruses that can damage computers. Any software obtained from outside City government should be virus checked prior to use. Internet users should take the necessary anti-virus precautions before downloading or copying any file from the

Internet. All downloaded files are to be checked for viruses; all compressed files are to be checked before and after decompression.

The use of e-mail through the City's network is for business purposes. Minimal personal use of the electronic mail system and Internet is permitted; however, the personal use is limited to the user's own time and is not to interfere with the job responsibilities and must adhere to all rules referenced herein. Employees should not use any e-mail messaging account or service other than that provided by the City.

When an instance of non-compliance with these guidelines is discovered or suspected, management shall take action in accord with City personnel policies **(See Section 6)**. Suspension of service to users may occur when deemed necessary to maintain the operation and integrity of the City of Seward network. User accounts and password access may be withdrawn without notice if a user knowingly violates the acceptable use policy. Abuse of the Internet access provided by the City in violation of law or the City policies will result in disciplinary action, up to and including termination of employment. Employees may also be held personally liable for any violations of the policy.

The following behaviors are examples of previously stated or additional actions and activities that are prohibited and can result in disciplinary action:

a. Any purpose which violates a federal, state or local law;
b. Sending or posting discriminatory, harassing or threatening messages or images;
c. Using the organization's time and resources for personal gain or for fundraising or public relations activities not specifically related to City activities;
d. Stealing, using or disclosing someone else's code or password without authorization;
e. Copying, pirating, downloading or installing software and electronic files without permission;
f. Sending or posting confidential material, trade secrets or proprietary information without authorization;
g. Violating copyright law;
h. Failing to observe licensing agreements;
i. Engaging in unauthorized transactions that may incur a cost to the organization or initiate unwanted internet services and transmissions;
j. Sending or posting messages or materials that could damage the organization's image or reputation;
k. Participating in the viewing or exchanging of pornography or obscene materials;
l. Sending or posting messages that defame, harass or slander other individuals;
m. Attempting to break into the computer system of another organization or person except in the cases necessary for the performance of a specific job-related duty;
n. Refusing to cooperate with a security investigation;
o. Sending or posting chain letters, solicitations or advertisements not related to business purposes or activities;
p. Using the internet for political causes or activities, religious activities or any sort of gambling;
q. Jeopardizing the security of the organization's electronic communications system;
r. Passing off personal views as representing those of the City or other users;
s. Sending anonymous e-mail messages;
t. Accessing or distributing computer games that have no relation to City activities;
u. Other similar actions.

2.9.3 Controlled Substance and Alcohol Testing Procedure

A. General Procedure

While at work, each City employee has a responsibility to the public to deliver services in a safe, efficient, and conscientious manner. In order to perform a job

in the safest manner possible, City employees must be able to work in a drug free environment and themselves be free from the effects of alcohol and other job impairing substances while on the job. Accordingly, while on the job or in a City vehicle, the use, sale, distribution, possession, or being under the influence of an intoxicating liquor, controlled substance, drug not medically authorized, or any other substance that impairs job performance or poses a hazard to the safety and welfare of the employee, the public, or other employees, is strictly prohibited and may result in suspension or termination. Furthermore, the City is obligated to comply with the Department of Transportation (DOT) regulations relating to controlled substances and alcohol use. The City will ensure that the controlled substances and alcohol testing conducted conforms to DOT workplace testing requirements.

To that end, a medical examination for prospective employees for the City of Seward shall include a substance abuse screen. Substances of abuse to be tested for include, but shall not limited to, amphetamines, barbiturates, benzodiazepines, cocaine, methadone, opiates, phencyclidine (PCP), propoxyphene, and marijuana. A prospective employee is defined as any employee who might be considered for employment by the City whether they are permanent full-time, permanent part-time and any seasonal, part-time or summer employees that operate equipment or vehicles. Equipment includes but is not limited to lawnmowers, chainsaws, weed whips and other potentially hazardous equipment. Any offer of employment shall be contingent upon a negative substance abuse test result. Any preliminary employment arrangement shall be immediately terminated if the result is positive.

Additionally, employees can be asked to submit to a test if cause exists to indicate that their health or ability to perform work might be impaired. Factors that could establish cause include, but are not limited to:

1) Sudden changes in work performance;
2) Repeated failure to follow instructions or operating procedures;
3) Violation of City safety policies;
4) Involvement in an accident or near-accident;
5) Discovery or presence of illegal of suspicious substances or materials in an employee's possession or near the employee's workplace;
6) Odor of alcohol and/or residual odor peculiar to some clinical or controlled substances;
7) Unexplained and/or frequent absenteeism;
8) Personality changes or disorientation; and
9) Arrest or conviction for violation of a criminal drug statue.

Employees may be tested if they are involved in an on-the-job vehicle accident cited for a moving vehicle violation, personal injury, or property accident on the job. Employees are prohibited from using alcohol or controlled substances following such an incident until they have been tested. Any employee who is seriously injured and cannot provide a specimen at the time of the incident must provide the necessary authorization for obtaining hospital records and other documents that would indicate whether there was alcohol and/or controlled substances in the employee's system.

B. Procedures for Employees with Commercial Driver's License (CDL)

It is the policy of the City of Seward that its commercially-licensed drivers (CDL) be free from controlled substance use and alcohol misuse. This policy has been adopted as part of the City's required compliance with United States Department of Transportation (DOT) regulations 49 C.F.R. Part 382. Those portions of this policy regarding disciplinary action or related to compliance with Nebraska law are based upon independent authority and are not prescribed by the DOT regulations.

Consequently, the use of illegal drugs by drivers is prohibited and drivers shall not use alcohol to engage in "prohibited conduct" as defined herein. Prohibited conduct is defined as the performance of safety-sensitive functions if under the influence of or impaired by alcohol. In addition to this policy, employees and other persons may be subject to other City policies and governmental regulations relating to alcohol misuse and controlled substance use affecting work activities that are not governed by DOT regulations related to functions performed by commercially-licensed drivers. Any driver who engages in prohibited conduct resulting in positive test result is subject to disciplinary action up to and including termination. Persons determined to have positive alcohol or drug test results will have a right to an impartial internal management review of those determinations when a review is requested. This review must be in accordance with the appeal process outlined in the City's Personnel Handbook with such modification as are necessary to accommodate alcohol and drug testing pursuant to the DOT regulations. Disciplinary action taken against an employee because of such positive alcohol or controlled substances test results is reviewable under the City's Grievance Policy.

1) *Types of Tests*: §382.301-382.311 The City has implemented six circumstances for controlled substances and alcohol tests pursuant to regulations promulgated by the U.S. Department of Transportation (DOT)

a. **§382.301 Pre-Employment Testing**—Prior to the first time a driver performs safety-sensitive functions for an employer, the driver shall undergo testing for controlled substances as a condition prior to being used, unless the employer uses the exception in paragraph (b) of this section. No employer shall allow a driver, who the employer intends to hire or use, to perform safety-sensitive functions unless the employer has received a controlled substances test result from the Medical Review Officer (MRO) or Consortium/Third-Party Administrators (C/TPA) indicating a verified negative test result for that driver.
b. **§382.303 Post-Accident Testing**—A driver involved in an accident must contact his or her supervisor as soon as possible following the accident. As soon as practicable following an occurrence involving a commercial motor vehicle operating on a public road in commerce, each employer shall test for alcohol for each of its surviving drivers: (1) who was performing safety-sensitive functions with respect to the vehicle, if the accident involved the loss of human life; or (2) who receives a citation within 8 hours of the occurrence under State or local law for a moving traffic violation arising from the accident, if the accident involved:
   (i) Bodily injury to any person who, as a result of the injury, immediately receives medical treatment away from the scene of the accident; or
   (ii) One or more motor vehicles incurring disabling damage as a result of the accident, requiring the motor vehicle to be transported away from the scene by a tow truck or other motor vehicle.
c. **§382.305 Random Testing**—The City conducts random alcohol and control substance testing for persons it assigns to operate Commercial Motor Vehicles (CMV). The City will administer the City's drug and alcohol testing program through a Third-Party Administrator (TPA), responsible for compliance with DOT regulations. Selections will be at random, the City will drug test, at a minimum, 25% of the average number of driver positions in each calendar year. The City will also select, at a minimum 10% of the average number of driver positions for random testing. Each employee who is notified of selection for random alcohol and/or controlled substances testing will proceed to the test site immediately.
d. **§382.307 Reasonable Suspicion Testing**—An employee shall be required to submit to an alcohol test when the employer has reasonable

suspicion. The employer's determination that reasonable suspicion exists to require the driver to undergo an alcohol test must be based on specific, contemporaneous, articulable observations concerning the appearance, behavior, speech, or body odors of the driver.

e. **§382.309 Return-to-Duty Testing**—The City will conduct testing in accordance with 49 CFR part 40, subpart O.

f. **§382.311 Follow-up Testing**—The City will conduct testing in accordance with 49 CFR part 40, subpart O.

2) *Refusal to Test*: **§382.211** Refusal to submit to required alcohol or controlled substance tests described herein will be grounds for refusal to hire driver/applicants and to terminate employment of existing drivers.

C. Provision of Training and Information (§382.601, §382.603)

The City Administrator or their designated representative will develop specific training for drivers and their supervisors. The City shall ensure that all persons designated to supervise drivers receive at least 60 minutes of training on alcohol misuse and receive at least an additional 60 minutes of training on controlled substances use. The training will be used by the supervisors to determine whether reasonable suspicion exists to require a driver to undergo testing under §382.307-Reasonable Suspicion Testing. The training shall include the physical, behavioral, speech, and performance indicators of probable alcohol misuse and use of controlled substances.

The City shall provide educational materials to each driver prior to the start of alcohol and controlled substances testing that explain the requirements of the DOT drug and controlled substances testing regulations and the City's policies for compliance. DOT regulations require each driver to sign a statement certifying receipt of these materials.

D. Substance Abuse Professionals and the Return-to-Duty Process (§40.287)

Each employee (including an applicant or new employee) who violates a DOT drug and alcohol regulation, must be provided a listing of Substance Abuse Professionals (SAPs) readily available to the employee and acceptable to the employer, with names, addresses, and telephone numbers. If the driver desires to become re-qualified, the driver must be evaluated by a SAP and submit to any treatment prescribed by the SAP following evaluation and treatment, if any, in order to become re-qualified, the driver must submit to and successfully complete a return-to-duty drug and/or alcohol test.

Such driver is also subject to follow-up testing. Follow-up testing is separate from and in addition to the City's reasonable cause, post-accident, and random testing procedures. Follow-up testing will be on a random basis and be in accordance with the instructions of the Substance Abuse Professional. **§40.307** No fewer than six unannounced follow-up tests will be performed in the first 12 months of safety-sensitive duty following the employee's return. Follow-up testing may continue for a period of up to 60 months following the driver's return to duty. The City does not guarantee or promise a position to the driver should he or she regain qualified status.

2.9.4 Use of City-Owned Vehicles

Department Heads and other employees, as designated by the Department Head, shall be allowed to use City-owned vehicles during on-duty hours. City vehicles (excluding Police) may not be taken outside of City limits or extra-territorial jurisdiction unless prior approval is given by the Department Head or City Administrator. Further, an employee may only be authorized to take a City-owned vehicle to their residence during working hours in limited circumstances and with authorization from their Department Head or City Administrator. In certain instances, the City Administrator may permit employees to take

City-owned vehicles home for the evening or to overnight trainings, conferences, seminars. Such vehicles shall not be used for other than official City business. Non-City employees – consultants, contractors, and other government officials - will be allowed to ride in City-owned vehicles for City related business, meetings, or conferences with the approval of the City Administrator or Department Head. In addition, both City and non-City employees may participate in the Police Department ride along program with approval of the Chief of Police. –Employees using City vehicles will be expected to keep them clean, to schedule regular service checks and shall abide by all federal, state and local traffic regulations.

2.10 Safety

Employees shall observe prudent safety precautions at all times. Department Heads shall train their personnel to work safely. Each employee shall know what to do in case of fire or other disaster as well as the location and use of first aid supplies. Safety precautions include the observance of traffic regulations when driving or operating City vehicles and equipment.

1) Equipment
   A. *Safety Belts* - All employees shall wear safety belts (shoulder and/or lap), when driving, operating or riding in City vehicles and equipment.
   B. *Hard Hats* - All employees shall wear hard hats, as supplied by the City, whenever working in an environment where a blow to the head could occur. Specifically, City employees shall wear hard hats in the following activities:

      i) When cutting, trimming and/or loading trees, shrubs and overgrowth;
      ii) When working in or around an area involving concrete removal;
      iii) When working in or around an area where a backhoe or loader is to be used on the project;
      iv) When working in or around an area where others are working overhead. For example, when working in a trench or pit or when working in or around scaffolding or buildings under construction or repair;
      v) When working in a bucket truck or digger derrick and when working as a groundman for employee in a bucket truck;
      vi) When working with underground electrical work.

   C. *Worksite Access* – Persons, including contractors or consultants, authorized by a Department Head or worksite foreman shall observe all safety and hard hat requirements at all work and construction sites.

   D. *Safety Vests* –Reflective vests, as provided by the City, shall be worn by all City employees working on construction, repair or a maintenance project on a public street or similar work site.

2) Violations of Safety Rules

   Violations of safety rules as set forth herein, as well as violations of internal departmental safety rules or the employee safety manual, shall not be tolerated.– Any employee found in violation of safety rules will result in disciplinary action, up to and including termination of employment.

   The City employee in charge at the site of any project shall be deemed responsible for all employees working at the site.— Said employee shall be equally subject to disciplinary action if the employee has willingly allowed safety violations to exist.

3) Reporting of Accidents and Injuries

   Employees shall report all accidents and injuries to their Department Head as soon as possible after the incident. Injuries of a minor, first aid nature may be treated at the job site or department office. If the injury requires medical attention, the employee may consult his family doctor or the EMC OnCall Nurse line. Rescue Squad services shall be used to transport employees to a hospital if the accident or injury results in incapacitation of the employee. Employees who have an accident with a City-owned

vehicle shall first notify a law enforcement agency and then the Department Head. This shall be done regardless of how minor the accident. Within twenty-four (24) hours of the incident, the affected employee and Department Head shall file an accident-injury report at City Hall for insurance and Safety Committee review purposes. In addition, the Department Head shall ensure that the City's insurance carrier is notified of the accident/injury if a claim may be filed. These same conditions apply when employees are operating privately owned vehicles while conducting City business.

2.11 Personnel Records

The Human Resource Director shall maintain records on each employee to include pertinent personal data such as name, address, telephone number, title of position held, the department to which assigned, current salary and changes in employment status. Additional information deemed important shall also be included. such as reports of attendance, conformance to expected standards, and other reports of performance evaluation. Employee personnel files are the property of the City. Employees have the right to inspect their personnel file at any time during business hours in coordination with the Human Resource Director. All personnel file inspections will take place in city offices in the presence of a representative designated by the Human Resource Director. The employee cannot remove any personnel files from the City offices but can make handwritten notes to record information included in their personnel files. Copies of the documents can be provided to the employee within four business days after a request has been made. The City reserves the right to charge the employee a reasonable fee to cover the copying costs.

Employees shall report to the Human Resource Director any changes of name resulting from a change in marital status, and any change of dependents. Also, to be reported are any changes in address, telephone number or information which will impact the personnel record of the employee. This information is required for insurance and tax purposes.

2.12 Peddling, solicitation, etc.

In order to avoid disruption to City services and operation, the City has established the following criteria related to solicitations and distribution of literature on City property:

a. Non-employees may not solicit or distribute literature on City property at any time for any purpose;
b. Employees may not distribute literature during working time for any purpose; and
c. Employees may not distribute literature at any time in working areas.

Working time includes the working time of both the employee doing the soliciting and distributing and the employee to whom the soliciting or disrupting is being directed. Working time does not include break periods, meal periods, or any other specified periods during the workday when employees are properly not engaged in performing their work tasks.

2.13 Conflict of Interest

No employee shall engage in any activity or enterprise which conflicts with their duties as a City employee or with the duties, functions, and responsibilities of the department in which they are employed. The following activities shall be considered a conflict of interest with City employment:

1) Any employment, activity or enterprise which involves the use for private gain of the City's time, facilities, equipment or supplies, or the badge, uniform, prestige or influence of a City office or employment.
2) Involves the receipt or acceptance by the employee of any money or other consideration from anyone other than the City for performance of an act in which the employee would be required or expected to render in the regular course of City employment or as part of their duties as a City employee.
3) Involves the performance of an act in other than their capacity as a City employee which may later be subject, directly or indirectly, to the control, inspection, review,

audit or enforcement by such employee or the department by which they are employed.

4) Involves so much of the employee's time that it impairs their attendance or efficiency in the performance of their duties as a City employee.

2.14 Gratuities

No employee of the City of Seward shall accept any fee, reward, gift or gratuity that has any connection with said employee's municipal employment or from the performance of an employee's official duties. This acceptance limitation of any gift or gratuity shall not apply in those instances where a departmental gift or gratuity of nominal value is given by some individual or organization. The policy is intended, however, to discourage all gifts and gratuities which may be offered any employee or group of employees. Each employee should decline acceptance of such gifts or gratuities in the most courteous manner possible.

2.15 Sexual Harassment Policy

The City of Seward expressly prohibits its officials or employees from engaging in any form of unlawful harassment or discrimination as well as any behavior that would be inconsistent with the spirit and intent of this policy. Harassment or discrimination of any employee is a serious violation of City policy and will not be tolerated. This policy sets forth procedures by which allegations of sexual harassment may be filed, promptly addressed (and investigated if necessary), and appropriate action taken if warranted.

The City of Seward prohibits unlawful sexual harassment. Sexual harassment is unlawful when it: (1) is based on the individual's sex; (2) is unwelcome; (3) is severe or pervasive in nature; and (4) is made a condition of employment, unreasonably interferes with an individual's work performance, or has the purpose or effect of creating an intimidating, hostile or offensive work environment.

It is not possible to define every action or word that could be interpreted as sexual harassment. Sexual harassment may encompass a wide range of verbal, physical and/or visual behaviors. Each situation depends on a number of factors. In some cases, one incident will be sufficient to constitute harassment. In other cases, a pattern or series of incidents may be necessary. In addition, even if the behavior in question may not constitute unlawful sexual harassment, it may still be inappropriate in our workplace and subject to disciplinary action.

Examples of behaviors that might constitute sexual harassment (depending on the circumstances) and are the types of behaviors in which an employee should not engage include, but are not limited to:

1) Unwelcome sexual advances;
2) Verbal harassment or abuse;
3) Subtle pressure or requests for sexual activity;
4) Unnecessary touching of an individual, e.g., patting, pinching, hugging, repeated brushing against another employee's body;
5) Requesting or demanding sexual favors accompanied by implied or overt threats concerning an individual's employment status;
6) Requesting or demanding sexual favors accompanied by implied or overt promise of preferential treatment with regard to an individual's employment status;
7) Sexually explicit language, gestures, pictures, jokes or objects; or
8) Distribution of representations or descriptions of actual or simulated sexual acts, representations or descriptions of excretory functions, masturbation, or lewd exhibition of the genitals in hard copy, email, cell phone cameras, IMS, texts or in any other manner.

In addition, this policy prohibits retaliation against any employee because he/she files a complaint under this policy, cooperates with any internal investigation, or otherwise pursues their legal rights.

Complaint Procedure: Any employee who feels in good faith that they have been subjected to sexual harassment has several ways to make their concerns known.

1) Aggrieved persons who feel comfortable doing so should directly inform the person engaging in sexual harassing conduct or communication that such conduct or communication is offensive and must stop.
2) If an aggrieved person does not wish to communicate directly with the person whose conduct or communication is offensive or if direct communication with the offending party has been unavailing, the aggrieved employee shall contact his or her supervisor or the offending party's supervisor.
3) Aggrieved employees alleging either sexual harassment by anyone with supervisory authority or the failure of a supervisor to take immediate action on the employee's complaint should communicate with the supervisor at the next level of command or file a grievance in accordance with the provisions of the appropriate grievance procedure.

Regardless of the means selected for resolving the problem, the City will take every reasonable measure to address (and investigate if necessary) the situation and take appropriate action if warranted. Employees filing a complaint will not be subjected to retaliation for bringing such matters to the City's attention in good faith. All concerns will be handled with the utmost confidence, to the extent reasonably possible and consistent with a fair resolution of the problem.

2.16 No Discrimination or Harassment Policy and Complaint Procedure

The City of Seward expressly prohibits its officials or employees from engaging in any form of unlawful harassment or discrimination as well as any behavior that would be inconsistent with the spirit and intent of this policy. Harassment or discrimination of any employee is a serious violation of City policy and will not be tolerated.

Harassment of City employees by anyone, whether management/supervisory personnel, co-workers, or others on the basis of race, color, religion, sex (including pregnancy, sexual orientation or gender identify--nonsexual in nature, sexual harassment is covered by a separate policy), national origin, age, disability, marital status, military status, genetic information or any other prohibited basis of discrimination protected by law, will not be tolerated. Such conduct will result in immediate disciplinary action, including possible termination of employment.

Harassment is unlawful when it: (1) is based on race, color, religion, sex (including pregnancy, sexual orientation or gender identity), national origin, age, disability, marital status, military status, genetic information or any other characteristic protected by law; (2) is unwelcome; (3) is severe or pervasive in nature; and (4) is made a condition of employment, unreasonably interferes with an individual's work performance, or has the purpose or effect of creating an intimidating, hostile or offensive work environment.

It is not possible to define every action or word that could be interpreted as harassment. Harassment may encompass a wide range of verbal, physical and/or visual behaviors. Each situation depends on a number of factors. In some cases, one incident will be sufficient to constitute harassment. In other cases, a pattern or series of incidents may be necessary. In addition, even if the behavior in question may not constitute unlawful harassment, it may still be inappropriate in our workplace and subject to disciplinary action.

1) Epithets, slurs, negative stereotyping, or threatening, intimidating or hostile acts, because of an individual's race, color, religion, sex (including pregnancy, sexual orientation or gender identity), national origin, age, disability, marital status, military status, genetic information or any other characteristic protected by law. This includes acts that purport to be "jokes" or "pranks" but that are hostile or demeaning with regard to any protected characteristic.
2) Written or graphic material that denigrates or show hostility or aversion toward an individual or group because of race, color, religion, sex (including pregnancy, sexual

orientation or gender identity), national origin, age, disability, marital status, military status, genetic information or any other characteristic protected by law and that is placed on walls, bulletin boards, or elsewhere on the employer's premises, or circulated in the workplace.

It is the responsibility of management personnel to maintain a working environment free of harassment on any of these bases and to make known to employees the policy of the City on such harassment. In addition, management is expected to take immediate action to deal promptly with known situations involving such harassment.

In addition, this policy prohibits retaliation against any employee because they file a complaint under this policy, cooperates with any internal investigation, or otherwise pursues their legal rights.

It is the employee's responsibility to report all incidents or perceived incidents of such harassment, pursuant to the following complaint procedure:

Complaint Procedure: Any employee who feels he or she has been subjected to harassment has several ways to make his or her concerns known.

1) Aggrieved persons who feel comfortable doing so should directly inform the person engaging in harassing conduct or communication that such conduct or communication is offensive and must stop.
2) If an aggrieved person does not wish to communicate directly with the person whose conduct or communication with the offending party has been unavailing, the aggrieved employee shall contact his/her supervisor or the offending party's supervisor.
3) Aggrieved employees alleging either harassment by anyone with supervisory authority or the failure of a supervisor to take action on the employee's complaint should communicate with the supervisor at the next level of command or file a grievance in accordance with the provisions of the appropriate grievance procedure.

Regardless of the means selected for resolving the problem, the City will take every reasonable measure to address (and investigate if necessary) the situation and take appropriate action if warranted. Employees filing a complaint will not be subjected to retaliation for bringing such matters to the City's attention in good faith. All concerns will be handled with the utmost confidence, to the extent reasonably possible and consistent with a fair resolution of the problem.

2.17 Workplace Violence

The City takes the safety of its employees very seriously. As a result, the City will not tolerate any acts or threats of violence by any employee or former employee. The City prohibits any acts or threats of violence against its employees, customers, or visitors by any individual on the City's premises at any time or while such individual is engaged in business with or on behalf of the City, on or off the City's premises. The City considers violence to include such things as physically harming, shoving, pushing, harassing, intimidating, or coercing another person. In addition, threatening, discussion of, describing, or joking about violence is considered violence as well.

In keeping with the spirit and intent of this policy, and to ensure the City's objectives in this regard, the City is committed to the following:

1) Providing a safe and healthful work environment;
2) Taking prompt remedial action up to and including immediate termination against any employee who engages in any threatening behavior or acts of violence or who uses any obscene, abusive or threatening language or gestures;
3) Taking appropriate action when dealing with customers, former employees, or visitors to the City's facilities who engage in such behavior. Such action may include notifying police or other law enforcement personnel and prosecuting violators of this policy to the maximum extent of the law; and

4) Prohibiting employees from possessing or carrying any firearms or other weapons, while on the City's property or while performing work as a City employee. For purposes of this policy, weapons include guns, knives, explosives, and other potential weapons.

In furtherance of this policy, employees have a role in preventing violence as well. If an employee believes a co-worker, former employee, customer, or visitor may become violent or they know of a violation of this policy, the employee must immediately report this to their supervisors. This would include, for example, threats or acts of violence, aggressive behavior, offensive acts, threatening or offensive comments or remarks, and the like. Employee reports made pursuant to this policy will be held in confidence, to the maximum possible extent. The City prohibits any form of retaliation against any employee for making a report in good faith under this policy.

SECTION 3: COMPENSATION OF EMPLOYEES

3.1 Pay Plan Structure

Within the limitations of its financial position, it is the policy of the City of Seward to maintain a Pay Plan which promotes the recruitment and retention of competent employees, through fair and equitable wages. It is the City's policy to maintain a salary program which provides peak motivation to employees by paying salaries which reflect an individual's accomplishments, as long as they remain within the limits of the established ranges for each position.

Each position is established by Ordinance and is classified into a "Pay Range" according to the level of responsibilities assigned the position. For example, a director's position would be expected to have a higher level of responsibilities than a subordinate, thus the pay range will reflect this fact. Each pay range shall be defined by a minimum salary and a maximum salary with seven salary steps in between (nine total steps). Except as affected by Longevity Pay **(see Section 3.5)**, an employee's salary shall not be lower than or higher than the Pay Range for his position.

3.2 Pay Plan Step Placement

All new employees shall be assigned a 'step' within the pay plan structure. It is expected that a new employee will be paid at the minimum ~~wage~~ rate of the ~~Pay~~ pay ~~Range~~ range (Step 1) for the position for which they were hired. The only exception to this rule would be a new employee who significantly exceeds the minimum requirement of the position, either in education or experience. This employee may, with the recommendation of the Department Head and approval by the City Administrator, receive a salary commensurate with their qualifications within the limits of the ~~Pay~~ pay ~~Range~~range. In the case of hiring a City Administrator, the terms of the employment contract shall dictate what step they begin with, as approved by the Mayor and City Council.

3.2a Working Out of Classification

When an exempt, salaried employee or employees is/are designated by the City Administrator to act in a higher job classification and performs (or will perform) said duties for more than 80 consecutive work hours, such employee(s) may be compensated at a rate capped at 20% above their current base pay step within their given pay range on a temporary basis. Such designation shall be in instances of absence of a higher classified employee due to prolonged illness, death, military leave, or due to a vacancy in the position. Such designation shall be delivered in writing by the City Administrator and be placed in the employee's permanent file. The City Administrator shall also provide notice of the termination of such designation in writing.

In instances of a prolonged vacancy (exceeding 80 hours) within a department, non-exempt hourly employees may be designated by a Department Head or the City Administrator to assume additional responsibilities for maintaining operations, including duties of a higher job classification. In these instances, additional compensation may be suggested at the discretion of the Department Head or the City Administrator on a temporary basis. Compensation shall be capped at a 10% raise per non-exempt employee that assumes said duties or could be a lesser amount based on the discretion of the Department Head or City Administrator. A designation of employees and percentage raise shall be delivered by the Department Head, if possible, to the City Administrator for consideration. Such designation shall only be used in instances of absence due to prolonged illness, death, military leave, or due to a vacancy in the position. If approved, such designation shall be delivered in writing by the City Administrator and be placed in the employee's permanent file. The City Administrator shall also provide notice of the termination of such designation in writing.

3.3 Pay Plan Maintenance

The City Administrator, with the assistance of the Human Resources Director, may periodically review the pay plan to ensure that that salary levels in the applicable labor markets are properly reflected. The City Administrator shall propose to the Mayor and City Council such pay adjustments as are necessary for the City to remain a competitive and equitable employer and to meet the requirements of the Nebraska Commission of Industrial Relations (NCIR) and State law. Comparability studies such as these may occur each fall and any salary adjustments shall be reflected in the first full pay period following October 1st if approved by the City Council for any or all employees.

The City shall complete a formal Comparability Study of wages and benefits at least once every five (5) years by a recognized expert in the field of job analysis, wage and fringe benefit surveying with familiarity in testifying such matters before the Nebraska Commission of Industrial Relations (NCIR).

3.4 Annual Performance Pay

Compensatory increases shall be awarded annually through a performance evaluation system **(See Section 5.3)** and increase ~~in~~ a 'step' in the pay-plan structure. Any change in salary will be effective April 1st to employees whose work performance is considered satisfactory or above **(defined in Section 5.3.2)**. All new employees must have completed a six-month introductory evaluation period **(See Section 1.5)** and all employees who have changed positions or been promoted must hold their new position for a minimum of six (6) months with at least satisfactory performance to be eligible for such pay increases. No performance increase will be awarded to an employee who has been demoted, suspended from work that results in disciplinary action, or who has two written reprimands in a 12-month period.

Annual performance increases are determined based on the average score of an employee's previous two semi-annual performance reviews and implemented effective the first full pay period after April 1st. Employee performance goal sheets are completed and reviewed with the employee semiannually (October 1st and April 1st). Under the City's performance review system, employees with at least satisfactory performance advance one step on their pay range. ~~For employees at the top of their pay ranges, performance pay for at least satisfactory performance scores will be awarded in the form of a one-time lump sum payment each April (not added to base pay). This payment will be in the amount of 3% of an employee's annual salary—only regular full-time and regular part-time employees will be eligible for this payment. The lump sum payment will have to be re-earned each year. Employees whose lump sum payment would have been in excess of 3% on April 1, 2023, under the prior performance standard before the adoption of the June 21, 2022, amendment to this handbook, shall have their lump sum amount frozen, until their payment is equal to 3% of their current salary or upon termination of the employment relationship.~~

3.4.1 Performative Pay

The City, in its sole discretion, may provide a one-time lump sum performative payment to eligible City employees in recognition of at least satisfactory performance during the prior twelve (12) month period. This Plan is intended to meet the definition of a discretionary bonus under 29 U.S.C. § 207(e)(3) and 29 C.F.R. § 778.211 (Fair Labor Standards Act (FLSA)) and is not intended to be included in the regular rate of pay for overtime calculation purposes. Any performative payment paid under this policy is entirely discretionary and does not establish a precedent for future payments. No employee has any contractual, vested, or enforceable right to receive a performative payment under this policy. The City retains sole and absolute discretion to decide whether a performative payment will be awarded in any year; determine the amount of any performative pay; determine eligibility; modify, suspend, or discontinue this policy at any time. If any portion of this Plan is determined by a court or enforcement agency to be inconsistent with the FLSA, the City reserves the right to modify the Plan to

maintain compliance. This Plan shall be administered by the City Administrator, subject to any applicable City Council authorization or budgetary approval.

If awarded, the performative pay shall be paid as a one-time lump sum payment, typically in the month of April. The timing of the payment does not create an expectation or entitlement to payment in any future year. The City may elect not to make any performative payment(s) in a given year. Eligibility includes full-time and regular part-time employees who have been placed at the top step of the established pay plan for one (1) full calendar year prior to the potential distribution of any performative payment. Eligibility to be considered for a performative payment does not guarantee receipt of a performative payment. The City may consider factors including, but not limited to: overall job performance; quality of work; initiative and leadership; contribution to departmental or City-wide objectives; attendance and compliance with City policies; fiscal constraints and budget availability. The City may exclude employees who are: on disciplinary status; on unpaid leave at the time of consideration; or separated from employment prior to discretionary approval.

Performance considerations are general and subjective in nature. This policy does not establish specific metrics; predetermined goals; objective formulas; or guaranteed outcomes. No employee shall be informed in advance that meeting specific criteria will result in a performative payment. Payment amounts may be influenced by but are not limited to individual or group performance; available appropriations; City priorities. Performative payment amounts may be set at the City's discretion but shall not exceed 3% of the annual regular wages. Any bonus paid under the Plan is not added to base pay; does not increase an employee's hourly rate or salary; does count toward pensionable earnings, leave accruals, or other benefits unless otherwise required by law.

3.5 Longevity Pay

Each full-time employee, who has completed their introductory period, will, for each year of service to the City, receive three dollars and forty-seven cents ($3.47) per month if classified as exempt, or two cents ($0.02) an hour if classified as non-exempt. This pay will be in addition to the established base pay in their respective salary range. Longevity pay will be reflected in the first full pay period in October of each year for anniversaries met during the previous fiscal year (October 1st – September 30th).

3.6 Recording of Work Hours

To ensure that accurate records are kept of the hours actually worked~~ (including overtime hours where applicable)~~, all non-exempt employees are required to record their time daily on the payroll timesheet software provided by the City. Employees must record the time when they begin work and when they complete their day, as well as any time they go off the clock for lunch, personal appointments or errands, or for any other reason. Note: The system will round time worked to the nearest ~~quarter hour~~five-minute increment (up or down) depending on the minute of entry. For shifts that span over the course of two days, hours accrued before midnight (CST) will be in the concluding day and hours accrued after midnight (CST) will be in the commencing day. If the shift for sworn police personnel starts on an observed holiday and concludes on a non-holiday, the entirety of the shift will be treated as a holiday (See Section 4.1.2). The Finance Director will keep a record of accrued ~~vacation and sick leave hours as well as compensatory time~~paid time off~~. Copies of~~ --these records will be kept on file at City Hall.

3.7 Pay Period Compensation

The standard pay cycle shall be bi-weekly. Payment will be made by direct deposit to the account identified from the employee. Funds will be available on the Friday following the preceding Friday's end of the pay cycle. The City is required by federal law to make certain deductions from employee wages, which include deductions for Social Security and Medicare taxes as well as federal, state, and any local withholding taxes. Additionally, all voluntary

deductions authorized in writing will be made as directed by the employee. Voluntary deductions may include the employee's share of ~~the~~ any insurance premiums and retirement contributions.

It is the City's policy to comply with the salary basis requirements of the Fair Labor Standards Act (FLSA). If an employee feels an error has been incurred on their paycheck, it should immediately be communicated to the ~~Human Resource Director~~Payroll Clerk, who will then promptly investigate the matter. Any discrepancies proved to be true will be rectified during the following pay period.

3.7.1 Incomplete Pay Period

An employee who does not work their regular scheduled work week shall have a percentage of their regular pay deducted from their pay, unless such absence is authorized as leave by the conditions below or authorized ~~as hereinafter provided for and is authorized~~ by their Department Head or the appropriate authority. Deductions from pay are permissible for an 'exempt' employee when one or more of the following conditions are present:

- when an exempt employee is absent from work for one or more full days for personal reasons other than sickness or disability;
- for absences of one or more full days due to sickness or disability if the deduction is made in accordance with a bona fide plan, policy or practice of providing compensation for salary lost due to illness;
- to offset amounts employees receive as jury or witness fees, or for military pay;
- or for unpaid disciplinary suspensions of one or more full days imposed in accordance to workplace disciplinary infractions (see Section 6). Non-exempt employees may also fall under this condition.

3.7.2 Overtime Pay

Overtime (1.5 times the employee's hourly rate) shall be paid to ~~those entitled regular,~~ non-exempt~~, full-time~~ employees working in excess of ~~the maximum set for their work period~~forty hours per week, or eighty hours per pay period. Overtime shall be calculated on the hours worked and include paid time off. ~~A~~All overtime pay must be pre-approved and documented. Working unauthorized overtime is grounds for disciplinary action, up to and including termination. If an employee is called to return to work to respond to an emergency, they shall be paid the overtime rate no matter how many regular hours they worked that week (benefits will be deducted as if the employee worked a regular shift). An emergency shall include utility service disruptions, snow and ice removal and other situations that are similar in nature which occur outside of normal working hours.

Outdoor ~~P~~pool employees are not eligible for overtime pay because they are employed at a facility in operation for less than seven months in any calendar year (FLSA Section 13(a)(3)). If an outdoor pool employee has multiple positions and 40 hours worked in a week is exceeded, overtime will be calculated. ~~The Fair Labor Standards Act, which is the Federal labor law for the application of overtime, minimum wage and Equal Pay Act includes the definition for employees that may be exempted from overtime.~~ Pursuant to the Fair Labor Standards Act (Section 13(a)(1), those classified as Administrative, Executive, Professional or Computer Professional will be exempt from overtime.

3.7.3 Payment of Wages in Advance or in Lieu of Vacation Leave

The City of Seward will not provide any advances on future wages, including accrued vacation leave. The City will also not pay an employee in lieu of vacation leave—the employee is encouraged to utilize the vacation leave which they have accrued.

3.7.4 Termination Pay

An employee who is dismissed, voluntarily resigns, or ~~dies~~ passes away as a current employee shall receive a final payroll payment on the next regularly scheduled payday or within two weeks of the last regularly scheduled payday, whichever date is earlier. This

final paycheck will include the payment of any accrued, non-sick leave hours at the rate upon which the employee was terminated. If the employee is separated from the payroll less than one week prior to the next regularly scheduled payday, the final payroll payment for the employee will be made within two weeks of the next regularly scheduled payday. Sick leave payout will be governed by **Section 4.3**.

3.8 Other Instances of Employee Compensation

Outside of regular hours and overtime, the following situations may necessitate compensation to an employee in the form of payment or leave accrued.

3.8.1 Compensatory Time

In an effort to ensure financial stewardship, the City will utilize compensatory time off in lieu of overtime pay. All compensatory time accrued and used must be approved by the Department Head for subordinates, City Administrator in the case of Department Head, or Mayor in the case of City Administrator.

Compensatory time shall be capped at 60 hours. For employees serving in the national guard or as a reservist, compensatory time can be specifically designated as a supplement to fulfill training requirements at the discretion of the City. If approved, this leave will be in addition to the City's annual military leave **(See Section 4.4.1c)** and capped at 120 hours. This leave can **only** be used for military leave purposes and cannot be transferred to an additional compensatory leave balance. Request to use this form of compensatory time accrual must be approved by the City Administrator before use.

Overtime hours, if converted to compensatory time, shall be accrued at a rate equal to the adjustment for pay if the overtime hours were paid out **(see Section 3.7.2)**. Hours worked during an observed holiday, at double time rate, cannot be converted to compensatory time but will be paid out. On-call hours, when an hourly employee is on standby, can be accrued as compensatory time. Should an hourly employee be called in, call-back time would be eligible for conversion to compensatory time, subject to a request submitted by the Department Head and approved by the City Administrator.

~~The Golf Shop Manager position is exempt from this regulation, due to the seasonal activities of the golf course. This position shall not accrue more than 480 hours compensatory time in any calendar year, which shall be used prior to April 1 of the following calendar year, unless the City Administrator authorizes an extension of this date.~~

The accrual of compensatory time by Police Officers, while attaining initial certification, may be exempt from this regulation with approval of the Chief of Police and City Administrator but cannot exceed 120 accrued hours. Accrued hours attained during this initial certification period shall be used down to 60 hours within 90 calendar days following training completion or will be paid out at the regular rate earned by the employee at the time the employee receives the payment.

Overtime earned when working for another department shall be paid out and charged to the department in which the work was performed. This time cannot be accrued as compensatory time.

The City shall have the option of buying back accrued compensatory time from employees on an annual basis at the City's discretion at the end of the fiscal year. An employee can request accrued compensatory time be paid out at any time during the year. If accrued compensatory time is bought back from the employee or paid out, the compensation shall be paid at the regular rate earned by the employee at the time the employee receives the payment. Upon termination of employment, an employee shall be paid for the unused compensatory time at the regular rate earned by the employee at the time the employee receives the payment.

An employee shall be permitted to use compensatory time within a reasonable period if the use does not unduly disrupt the operations of the City.

Exempt employees shall be allowed flex time off for attendance at official evening meetings or events, weekend meetings or events, and for extra time spent in order to complete special projects. This leave will be granted~~,~~ with approval of the City Administrator or appropriate authority~~,~~ and as long as such time off does not interfere with completion of their duties. A running report of flex time earned/used shall be kept by the employee and periodically provided to the Human Resource Director for tracking and documentation purposes. Any ~~compensatory~~ flex time accruals will not be paid out upon termination of employment.

3.8.2 On-Call Time Situations ~~**(UPDATED 12-3-24)**~~

a. *Regular On-Call:* Employees in the Electric, Water/Wastewater, Street, and Public Properties Departments are subject to regular "On-Call" duty. Regular on-call duty consists of a seven-day period, when the employee is responsible for any emergency call in the respective utility including any after hours, weekend, or holiday duty. Departments shall ensure on-call duty during holidays is handled by only one employee during a seven-day period. Compensation for 'on-call' status during the scheduled seven-day period shall consist of two (2) hours of paid leave, or four (4) hours of paid leave if it occurs during a holiday week, for the seven-day period. If an employee is on regular on-call duty, the two (2) or four (4) hours of paid leave will be taken off during the same pay period. If, in the opinion of the Department Head, the workload is such that the employee cannot take the paid leave, the employee will be paid at the regular hourly rate for the two (2) hours earned while "on-call"—such paid leave shall count towards overtime calculations or may be converted to compensatory time off.

b. *SCADA Monitoring:* Supervisory Control and Data Acquisition (SDADA) monitoring is expected for all employees in the Electric and Water/Wastewater Departments as scheduled by their respective department head. SCADA monitoring may be conducted in an active or passive manner. Active monitoring will include the expectation that the designated employee accesses the software at least one time daily, and often multiple times, outside of regular working hours. Passive monitoring will carry no expectation that the designated employee will actively monitor the software unless alarmed with an emergency—in this case the employee will be compensated as per the provisions of 3.8.3. For purposes of clarification, the on-call employee in the Water/Wastewater Department will be considered as an 'active' monitor of the system and shall be compensated with an additional two (2) hours of paid leave in addition to the provisions of Part A. If, in the opinion of the active monitor and confirmation by a supervisor, the status of the facilities requires active maintenance, then the employee shall be compensated as per the provisions of Section 3.8.3. The on-call employee for the Electric Department shall be considered a 'passive' monitor of the system, and thus will not be compensated further unless an emergency arises.

c. *Inclement Weather:* In times of expected inclement weather, identified employees have an expectation to report to respond to the situation. These employees shall be identified as 'on-call' with prior written notification of a possible event/emergency by the supervisor of the weather event. Once written notification has been given, identified employees shall be compensated with—one-half (1/2) an hour of paid leave, or one (1) hour of paid leave on the actual, not observed holiday--for each day they are placed in 'on-call' duty. Such compensation shall count towards overtime calculations or may be converted to compensatory time off. Employees must always be reachable by telephone, cell phone or other method as agreed to by

the City. Regular 'on-call' employees shall not receive inclement weather compensation.

During on-call duty, an employee should abstain from consumption of alcohol. It shall be the responsibility of an employee to advise their supervisor if they have consumed alcohol or believes that they have a blood alcohol content of .04 or greater or have taken any other drug. With that information, the supervisor shall have the discretion of what duties that employee is to perform. If the employee has reported to the site, they may be required to submit to an alcohol or controlled substance test when the employer has reasonable suspicion to believe that they are in an intoxicated state. If a previously informed on-call employee reports in a state exceeding the legal limit, they will be subject to disciplinary action up to and including termination. They may also be subject to legal disciplinary action if they were in operation of a motor vehicle.

3.8.3 Call-Back Time

For all employees called in to work, who are eligible to receive overtime pay, compensation shall consist of a rate not less than one- and one-half times the employees' hourly rate (double time on the City's actual—not observed—holiday), for a minimum of two (2) hours, regardless of the time actually worked. Compensatory time may be eligible for employees called-back, subject to **Section 3.8.1**.

In the case of a call back to which the employee was informed of the likelihood beforehand, an employee should abstain from consumption of alcohol. In the case of an emergency call-back in which the employee was not notified beforehand, it shall be the responsibility of an employee to advise their supervisor if they have consumed alcohol or believes that they have a blood alcohol content of .04 or greater or have taken any other drug. With that information, the supervisor shall have the discretion of what duties that employee is to perform. If the employee has reported to the site, they may be required to submit to an alcohol or controlled substance test when the employer has reasonable suspicion to believe that they are in an intoxicated state. If an employee reports in a state exceeding the legal limit, they will be subject to disciplinary action up to and including termination. They may also be subject to legal disciplinary action if they were in operation of a motor vehicle.

3.8.4 Court Pay for Sworn Personnel

When required to appear in court outside of scheduled work hours, sworn police personnel shall clock in and receive at least two hours of clock in time—these may be applied as overtime pay if eighty hours in the pay period have been exceeded. If a court appearance is longer than two hours, the sworn employee shall receive the actual number of hours of time spent at the court appearance—these may be applied as overtime pay if eighty hours in the pay period have been exceeded.

3.9 Instances of Employee Reimbursement

An employee may be entitled to compensation due from the City in the subsequent instances if it is approved by a Department Head and/or City Administrator. Requests for reimbursement shall use the current form established by the Finance Department and should be submitted as soon as possible after the expense is incurred. **Reimbursement requests in excess of six (6) months may be denied at the discretion of the Department Head and/or City Administrator**.

3.9.1 Uniform/Apparel Replacement

~~All~~ An ~~new full-time~~ employee~~s~~ ~~within the Electric, Public Properties, Street, and Water/Wastewater Departments will~~ may be issued an allotment of uniforms/apparel as determined by the Department Head. After initial issue, it will be the employee's obligation to properly maintain or replace uniforms/apparel as needed. Funds for maintenance and replacement of uniforms/apparel ~~will~~ may be allotted annually for each

qualifying employee—as determined independently by each Department Head and established by the annual budget. Any requests for items exceeding the annual allotment shall be incurred at the cost of the employee subject to approval of the Department Head and/or City Administrator. If maintenance or replacement of a uniform/apparel is requested, the item shall first be inspected by the Department Head to ensure it is needed. At the discretion of the Department Head, the replacement /maintenance item shall either be ordered by the City or the employee may order and submit a request to the Department Head for reimbursement. No reimbursement will be made to any employee unless the receipt and item is presented to the Department Head for confirmation of receipt. Any City-reimbursed items should be returned to the City promptly upon termination at the discretion of the Department Head and/or City Administrator.

3.9.2 Lodging, Meals and Incidentals

Subject to prior approval from their Department Head and/or the City Administrator **(See Section 5.2),** an employee may receive reimbursement for any lodging, meals & incidentals costs up to the current U.S. General Services Administration rates. Any expenditures in excess of the pre-approved rates, may be incurred at the employee's expense at the Department Head's discretion, unless the expenditure(s) were unavoidable given the situation. To be reimbursed for expenses while on travel status, the employee must have receipts to accompany the claim and the reimbursement must be approved by the Department Head and/or City Administrator.

Meals may be provided, or eligible for reimbursement, for employees who begin performing emergency service work four (4) hours prior to their normal workday; or for work that continues four (4) hours past their normal work day, as long as the expenditures adhere to the U.S. General Services Administration rates.

3.9.3 Mileage

Subject to prior approval from the Department Head and/or the City Administrator **(See Section 5.2)**, an employee may be reimbursed for mileage incurred in their personal vehicle at the prevailing rate established by the Internal Revenue Service (IRS). This rate includes all travel and storage expenses (parking fees) of the vehicle. Odometer readings and/or documentation will be necessary for mileage reimbursement. To be reimbursed for any expenses while on travel status, the employee must have receipts to accompany the claim and the reimbursement must be approved by the Department Head and/or City Administrator.

3.9.4 Tuition

Subject to prior approval from Department Head and the City Administrator **(See Section 5.2)**, an employee may be reimbursed up to 50% of all eligible costs—including tuition, books, and laboratory fees—for any courses deemed to enhance employee's skills and abilities in their current position. To be reimbursed for any expenses, the employee must provide proof of successful completion of the course and a billing statement. The reimbursement must be reviewed and approved by the Department Head and City Administrator.

3.9.5 Personal Cell Phone

Employees deemed to be subject to 'on-call' or 'call-back' requirements, may be eligible for quarterly reimbursement of cell phone expenditures subject to prior approval from their Department Head and City Administrator. The amount of monthly reimbursement shall be established by the City Administrator.

3.9.6 Permits and Licenses to Operate City Vehicles and Equipment

Subject to the requirements for the position and the necessary permits and licenses, employees may be eligible for full reimbursement of these costs. The permit/license as well as the reimbursement request shall be presented to the Department Head and/or

City Administrator for review and approval. Depending on the cost and nature of the training(s), they may be subject to a signed agreement between the employee and the City. Such an agreement would stipulate terms for employee repayment for training(s) to the City should they leave City service prior to a given period of time.

3.9.7 Eyeglass Program

Subject to adherence to the program requirements, an employee may be eligible for reimbursement up to 50% of the purchase cost of protective eye wear.

3.9.8 Miscellaneous Supplies for Operations

In some instances, an employee may be instructed by a Department Head or the City Administrator to make purchases on behalf of the City for convenience purposes to necessitate service operation. Reimbursement requests will be submitted and approved by a Department Head and/or the City Administrator.

SECTION 4: EMPLOYEE BENEFITS

4.1 Holiday/Annual Personal Leave

City offices shall be closed on the following ~~Holidays~~holidays, though some employees may be subject to on-call **(See Section 3.8.2)** or call-back **(See Section 3.8.3)** provisions. Employees not subject to on-call or call-back provisions will have no expectation ~~to perform~~of performing job-related duties on an observed holiday. All regular full-time and regular part-time employees will be paid their normal rate ~~on~~ for the following observed holidays:

New Year's Day	Martin Luther King, Jr. Day
Memorial Day	Independence Day
Labor Day	Veteran's Day
Thanksgiving Day	Day after Thanksgiving
Christmas Day	
Annual Personal Leave – Thirty-two (32) hours for regular full-time employee Sixteen (16) hours for regular part-time employee	

The following provisions are attached to the management of observed holidays for regular full- and regular part-time employees:

1. Calendar - If a~~n observed~~ holiday falls on a Saturday~~, when offices are normally closed~~, ~~the holiday~~it shall be observed on the preceding Friday. If a~~n observed~~ holiday falls on a Sunday,~~ when offices are normally closed,~~ ~~the holiday~~it shall be observed on the Monday following.
2. Police Officer Compensation – All working ~~regular full-time~~sworn Police ~~Officers~~personnel~~, reporting for duty on the observed holiday,~~ are compensated for holiday hours equal to worked hours at the overtime rate. ~~will be compensated for holidays on the day of the actual holiday at the overtime rate of time and one-half (**See Section 3.7.2 'Overtime Pay'**).~~ All non-~~reporting~~working~~,~~ ~~regular full-time~~sworn Police ~~Officers~~personnel~~,~~ will observe the holiday in the same manner as all other City employees~~,~~ with compensation for eight (8) hours at their normal rate.
3. Non-Police Officer Scheduled Employees' Compensation – In some instances, staff may be assigned to events occurring on a holiday, which are not subject to sections 3.8.2 or 3.8.3. In these circumstances, the employee will receive compensation for eight (8) hours at their normal rate and will be allowed to adjust their pay period hours accordingly to avoid overtime pay if possible. If schedule adjustment is not possible, any overtime hours incurred during the pay period will be paid at the regular overtime rate, not at the double time rate of a holiday.

~~3.~~4. Mayor's holiday declaration - At the Mayor's discretion, City offices may be declared as closed on other recognized holidays and, in those instances, all employees scheduled to work that day will be paid at their normal rate or at the police officer compensation rate as noted above.

4.1.1 Personal Leave Provisions

All regular full- and regular part-time employees (**See Section 1.1)**~~,~~ shall be issued annual personal leave renewed each January 1st. ~~-~~Those in their introductory~~/evaluation~~ period (**See Section 1.5**) will be assigned personal leave on a pro-rated basis from their date of hire through December 31st, with a full complement of eligible hours to be assigned in the following calendar year.~~,~~

- Regular full-time employees will acquire thirty-two (32) hours or four (4) days
- Regular part-time employees will acquire sixteen (16) hours or two (2) days

Any ~~Personal~~ personal leave time not used by December 31st of each year ~~will be carried over to the next year; however, time carried forward from the prior year~~ will be deducted from the thirty-two (32) or sixteen (16) hours acquired on January 1 so that no employee will have more than their cap at any given time. Personal leave must be taken a minimum of fifteen (15) minutes at a time. ~~New employees will be assigned personal~~

~~leave on a pro-rated basis from their date of hire through December 31st, with a full complement of eligible hours to be assigned in the calendar year.~~ Unused Personal leave—upon resignation, termination or employee death—will be issued in same manner as vacation payout (**See Section 4.2.3**).

4.2 Vacation Leave ~~(effective 10/1/23)~~

Employees with the following classifications are considered eligible—introductory, regular full-time, and regular part-time—and will be issued a portion of their annual leave each pay period based on their service time. Each eligible employee shall be entitled to vacation leave per basis of one (1) year successive periods of continuous employment, including any credit received for prior service **(See Section 1.4)**. A year, for this purpose, shall begin from date of hire and shall constitute 365 days. Vacation leave for an eligible employee shall begin accruing on the day the employee enters service with the City and may be used as it is accrued. ~~; however, an employee may not use vacation leave until they have satisfactorily completed their introductory period **(See Section 1.5)**—at which they will be granted half their annual accrual.~~

The City Administrator—at their discretion—may determine a newly hired, eligible employee has relevant experience to be translated to 'years of service' in vacation accrual. In these instances, for every year of relevant experience determined by the City Administrator, it shall be counted as half a year of service for vacation leave accrual purposes only. For example, an eligible employee has 15 years of relevant experience outside of the ~~City, they~~City would be credited for 7.5 years of service and placed in appropriate vacation accrual category from their first day of employment with the City. This assigned service will not be utilized for recognizing service milestones as indicated in **Section 5.4**, the employee's first day with the City (in addition to any credited City service, **See Section 1.4**) will govern this program.

Annual Leave for Regular Full-Time Employees			
Years of Service	**Biweekly Accrued**	**Yearly Accrued**	**Accrual Limit**
Hire to ~~end~~ 5th year anniv.	3.0769	80 hours	120 hours
6th year to 10th year anniv.	4.6154	120 hours	180 hours
11th year to 15th year anniv.	5.5385	144 hours	216 hours
16th year to 20th year anniv.	6.1538	160 hours	240 hours
21st year to 25th year anniv.	7.0769	184 hours	276 hours
26th year to end of service	7.3846	192 hours	288 hours

Note: Per the Fair Labor Standards Act (FLSA), no exempt employee's salary will be subject to reduction when the exempt employee is absent for less than a day and has exhausted their vacation, personal, and comp time leave benefit.

Annual Leave for Regular Part-Time Employees (20+ hrs/week)			
Years of Service	**Biweekly Accrued**	**Yearly Accrued**	**Accrual Limit**
Hire to 5th year anniv.	1.5385	40 hours	60 hours
6th year to 10th year anniv.	2.3077	60 hours	90 hours
11th year to 15th year anniv.	2.7692	72 hours	108 hours
16th year to 20th year anniv.	3.0769	80 hours	120 hours
21st year to 25th year anniv.	3.5385	92 hours	138 hours
26th year to end of service	3.6923	96 hours	144 hours

4.2.1 Scheduling of Vacations

Employees shall submit vacation requests for approval as soon as possible in advance of the vacation leave date. Holidays occurring during scheduled vacation leave will be charged as holiday leave. In respect for the continuity of City operations, proposed ~~Vacation~~ vacation leave dates shall be discussed and submitted via the payroll timesheet software to gain official approval from the department head, or the City Administrator (if the employee is a department head), or the Mayor (if the employee is the City Administrator). In rare instances or in extenuating circumstances, the City Administrator may have the discretion to waive the requirement of prior approval.

For those employees who have accumulated at least one hundred sixty (160) hours, no more than eighty (80) hours shall be taken at one time, unless special permission is granted by the Department Head, or the City Administrator (if the employee is a department head), or the Mayor (if the employee is the City Administrator). This requirement is to ensure the continuity of the operation of City services.

4.2.2 Vacation Leave Cap

Employees are encouraged to use all their earned vacation days each year. The vacation leave cap is set at ~~One~~ one and one-half times the annual vacation accrual limit ~~is equivalent to one and one-half times the maximum number of vacation hours~~ an employee is entitled to earn during a ~~given vacation accrual~~service year, based on the employee's length of service. Once an employee reaches their accrual cap (see tables above), the~~ir anniversary date, employees~~y are not eligible to ~~earn~~ accrue any additional vacation ~~once they have reached one and one-half times their annual vacation accrual limit,~~ until they use ~~all or~~ a portion of their ~~earned~~ vacation leave. ~~One and one-half times the annual vacation accrual limit is equivalent to one and one-half times the maximum number of vacation hours an employee is entitled to earn during a given vacation accrual year, based on the employee's length of service.~~ For example, an employee with eleven (11) years of service ~~may~~ will earn ~~up to~~ one hundred forty-four (144) hours of vacation during their vacation accrual year allowing for a max of 72 hours carried over from a previous accrual year ~~(the employee's annual vacation accrual limit)~~. Thus, this employee will not accrue any additional vacation time until ~~the earned~~ accrued vacation time is used and the number of hours in the employee's "vacation bank" is reduced to below two hundred sixteen (216) hours. ~~Any vacation remaining at the end of the anniversary year, up to the cap, will be carried over.~~

4.2.3 Unused Vacation Leave at Termination of Employment

Employees will not be allowed to use vacation leave, unless approved by the City Administrator, in the final two weeks prior to termination of employment relationship to ensure a successful transition of work responsibilities. Employees who have unused ~~earned~~ accrued vacation leave at the conclusion of their ~~last day of~~ employment~~—upon resignation, retirement, termination or death—~~ shall be paid for ~~such~~ unused ~~earned~~ vacation leave in their final paycheck at their current rate (base pay + longevity). In the event of employee death, the deceased's personal representative, if such is determined, or the next of kin shall be paid any unused vacation leave and may be subject to a surety bond protecting the City from further claims by the estate.

4.3 Sick Leave—including Leave for Injury

All eligible employees—regular full-time employees and regular part-time employees—shall be provided with paid sick leave for ~~use if incapacitated by~~ illness or injury~~,~~; if due to ~~-~~contagious disease, the employee's presence at work would jeopardize the health of others~~,~~; and for medical, dental, optical, or other health care appointments. Those employees will be issued ~~monthly~~ a portion of their annual sick leave each pay period in the following increments:

Annual Sick Leave for Eligible Employees			
Type of Employee	**Biweekly Accrued**	**Yearly Accrued**	**Accrual Limit**
Full-time	3.6923	96 hours	900 hours
Regular Part-Time (20+ hrs weekly)	1.8462	48 hours	450 hours

- ~~Regular full-time employees will accumulate eight (8) hours monthly or ninety-six (96) hours annually. Max accumulation is nine hundred (900) hours.~~
- ~~Regular part-time employees will accumulate four (4) hours monthly or forty-eight (48) hours annually. Max accumulation is four hundred fifty (450) hours.~~

Sick leave for an eligible employee shall begin accruing on the day the employee enters service with the City~~,~~ and may be used as it is accrued. ~~with any sick leave for a fraction of a month to~~

~~be issued on a pro-rated basis. An employee may use any accrued sick leave during their introductory period.~~ Sick leave shall be subject to the following rules:

1. Sick leave may only be used for the situations identified in **Section 4.3.1**;
2. Sick leave shall not be granted in advance of accrual, except as noted below in item #7. Eligible employees may be authorized to use~~-~~ vacation leave, personal leave, compensatory time, or leave without pay **(See Section 4.5.1)** when sick leave is exhausted;
3. Notification of utilization of sick leave shall be made to the Department Head, City Administrator (in case of a Department Head), or Mayor (in case of the City Administrator) on as timely basis as is possible or by the time their normal workday begins. Failure to notify the City of an absence may be grounds for disciplinary action as identified in **Section 6**~~—~~.~~this~~ This leave will be deducted from one of the following leave sources, in this order: compensatory time, personal leave, and vacation leave;
4. Approval in advance shall be obtained for non-emergency health care appointments;
5. The City may request and obtain medical certificates or otherwise verify the circumstances surrounding the utilization of sick leave, the abuse of which may be grounds for disciplinary action as identified in **Section 6**;
6. The minimum period of sick leave shall be no less than a 15-minute increment;
7. Sick leave may be used by an introductory employee during the introductory/evaluation period, but only if it has been accrued. If an introductory employee has no accumulated sick leave and is absent due to illness or for any other reason for which sick leave is allowed, a deduction shall be made from their allocated personal leave. At the exhaustion of personal leave and at the discretion of the City Administrator, a regular employee may request and be granted an advance of sick leave—up to a maximum of 48 sick leave hours for full-time employees or up to a maximum of 24 sick leave hours for eligible part-time employees—or may request a voluntary leave of absence without pay;
8. If an eligible employee has exhausted accrued sick leave and is absent due to illness or for any other reason for which sick leave is allowed, leave will be deducted in the following order: compensatory time, personal leave, and vacation leave. If all sources of leaves are exhausted, an employee may request leave through the 'voluntary leave transfer program' **(See Section 4.3.3)**.

4.3.1 Eligible Uses of Sick Leave

Employees may use earned sick leave for personal needs or the needs of immediate family—spouse, domestic partner, children (including biological, adopted, foster, step or in loco parentis), grandchildren, grandparents, sibling, parents, and others bearing this same relationship to the employee's spouse, or any other legal dependent who resides with the employee. Reasons for sick leave include, but are not limited to, medical, dental, or optical examinations and care (including preventative care) for the employee or immediate family; treatment of a mental or physical illness, injury or health condition; care for an immediate family member with a mental or physical illness, injury or health condition; maternity or paternity leave; sickness that renders the employee incapable of performing his/her required job duties; or for exposure to contagious disease under circumstances in which the health of other employees or the public would be endangered by the employee's presence on duty. Depending on the seriousness of the injury or illness, the employee may be required to present a doctor's certificate indicating that they are capable of returning to work. Department Heads will have the authority to send employees home if they feel it is necessary for the well-being of all employees. Any employee who does not follow this rule shall be subject to disciplinary action~~s~~.

4.3.1a Parental Leave

The City provides maternity or paternity leave to all employees. Employees should notify their Department Head about their intention to take this leave with as much notice as is possible to ensure continuity of operations. The benefits are as follows:

- An employee is eligible to take up to 12 work weeks of unpaid, job-protected leave as per the Family and Medical Leave Act **(See Section 4.5.2)**.
- An employee may enroll in a short-term disability policy that is offered through the City's insurance provider and paid for at the employee's expense.
- An employee may use all previously earned leave, including sick, compensatory, personal, or vacation leave.
- An employee's health insurance will continue during the parental leave period; however, the employee shall be responsible ~~to pay~~for paying for their portion of the coverage. Arrangements should be made prior to the start of the leave period if any unpaid leave is utilized.

It is requested the employee maintains regular contact with their Department Head to discuss their expected return to service and their return-to-work plan.

4.3.2 Work-Related Injury or Illness Leave

Subject to the Statutes of Nebraska **(Section 48-101)**, all employees of the City who suffer on-the-job accidents or injuries are covered by the Worker's Compensation Act. When on-the-job accidents occur, they must immediately be reported to the Department Head and a call should be made to the EMC nurse, if practical. An Accident Report must be completed by the employee and turned ~~in to~~into ~~HR~~ the Human Resource Director within 24 hours of incident or the next business day. Employees injured on City jobs, who are eligible to receive worker's compensation disability payments, shall receive the worker's compensation check and the City will provide~~, --~~in gross wages~~, --~~the difference between the worker's compensation payment and the amount of the employee's earned wages during a given pay period. The difference in the worker's compensation check payment and the employee's regular base pay shall be prorated against the employee's accumulated ~~sick, holiday, personal, and vacation~~ leave~~s~~. Once these have been exhausted, the employee will only be eligible for the worker's compensation payment.

All employees must give their Department Head written notice (at least seven calendar days, if possible) of any non-emergency treatment or surgery for any alleged work-related injuries or illnesses. This notice will ensure that City operations are able to continue as normal.

4.3.3 Voluntary Leave Transfer Program

Under the Voluntary Leave Transfer Program, an employee eligible for leave, as defined by Employee Handbook **Section 1.1**, may voluntarily transfer leave directly to another eligible employee who has a personal or family medical emergency and who has exhausted their available paid leave (sick, compensatory, personal, vacation). There is no limit on the amount of donated annual leave a recipient may receive from donor(s). However, any unused donated leave must be returned to the leave donor(s) when the medical emergency ends and the employee returns to regular work status. The program shall be subject to the following provisions:

1. *Eligible Participants*: An eligible participant is anyone defined as a regular full-time or regular part-time employee as defined by **Section 1.1** of the Employee Handbook.
    a. *Application to Become a Leave Recipient:* An employee must complete a Leave Transfer Request Form to be eligible for leave donations. Forms are available in the Human Resources Office at City Hall. Certification regarding the medical emergency from one or more physicians must accompany the Leave Transfer Request Form. The City will contact all departments within two~~en~~ (2~~10~~) business days of a request for donated leave. Eligible employees wishing to donate leave to the recipient must complete a Voluntary Leave Transfer Form. Forms are available in the Human Resources Director's Office ~~at City Hall~~.

2. *Eligible Events:* A medical emergency is a medical condition of either the employee or the employee's family member, defined under **Section 4.3.1**, that is likely to require the employee to be absent from duty for a prolonged period. A prolonged period is absence from duty without available paid leave for at least 24 work hours for a full-time employee or 12 hours for a part-time employee.
    a. *Use of Donated Leave:* A leave recipient may use donated leave only for purposes related to the medical emergency for which the leave recipient was approved. A leave recipient must use any accrued annual leave (sick, compensation, personal, vacation) before using transferred donated leave. Donated leave will be utilized by the recipient the order it was donated. Leave transferred to a leave recipient may NOT be:
        - transferred to another recipient from the original recipient; or
        - included in a benefits payout should the employee terminate employment (including death)
3. *Eligible Transferrable Paid Leave:* Available transferrable paid leave includes an employee's sick ~~leave~~ (only if donating employee has reached a threshold of 480 hours accrued), compensatory, personal, safety, and vacation leave ~~balance up to the date of the transfers~~. Leave shall be deducted from the donor's ~~current~~ leave bank upon donation and shall be accounted for and maintained by the Human Resource and Finance Departments until used or returned to the donor.
    a. *Limitations on Leave Donations:* An employee may donate not more than one-half of the amount of annual sick or vacation leave they would accrue during the leave year. Compensatory, personal and safety hours may be donated in their entirety.
4. *Termination of the Eligible Event:* An eligible event terminates when one or more of the following occurs:
    - The leave recipient's employment is terminated;
    - The leave recipient provides written notice (doctor's note to return to work) that the eligible event is over; or
    - the leave recipient returns to work at their regular status.
5. Restoration of Unused Donated Leave: Any unused transferred leave remaining to a leave recipient's credit on termination of the medical emergency must be restored to the leave accounts of the donors. Once transferred leave is restored to a leave donor's account, the leave is treated the same as other annual leave in the account and becomes subject to the annual leave cap limitations:
    - Restored unused sick leave causing the donor's balance to go over 900 hours will be lost.
    - Should the return of transferred leave cause a donor to go over the vacation cap amount, the employee will have 30 days to use the amount over the cap limit.

    Leave shall be restored back to donors in reverse order of how it was donated, this is to account for its use in the order it was donated in.

4.3.4 Unused Sick Leave at Termination of Employment

Unless an employee meets one of the conditions in the following sentence, all sick leave accumulated by an employee shall not be reimbursed upon termination of ~~the~~ employment ~~relationship~~ with the City. An employee who retires in good standing after reaching the age of 'full retirement' or 'early retirement' as defined by the Social Security Administration; or who resigns in good standing with twenty (20) years of continuous service to the City; or who dies while employed with the City, shall be paid fifty percent (50%) of their accumulated sick leave balance.

4.4 Other Granted Paid Leave:

4.4.1 Administrative Leave:

In limited instances, the City Administrator may grant subordinate employees paid

administrative leave, which will not require a leave request. A few of the qualifying instances are described below:

4.4.1a. Court and/or Jury Duty:

To be granted administrative leave for this reason, an employee must present to the Human Resource Director an original summons or court subpoena and at the conclusion of service, a certified statement of the Clerk of Court confirming the start and end date.

- An employee who is required to serve as a juror or as a witness in a federal, state, county, police, or municipal court or as a litigant in a case resulting directly from the discharge of the employee's duties shall be granted leave with pay to serve in that capacity.
- An employee involved in court as an expert witness (not related to their duties as an employee) or in a personal case, either as a plaintiff or as a defendant shall not be granted administrative leave with pay. Instead, the employee's absence shall be deducted from their earned compensatory, personal, vacation leave. If all sources of earned leave, an employee may request a voluntary leave of absence without pay as specified in **Section 4.5.1**.
- Pay received from the court for such duty shall be given to the City Treasurer. Expense reimbursement shall be kept by the employee.

4.4.1b. Due to Emergency Closure of City offices:

- *During regular City office hours* ~~***(UPDATED 12-3-24)***~~*:* When an emergency condition necessitates the closing of a facility, the Mayor and/or City Administrator may make a determination as to whether a cancellation of work and facility closing is necessary. Facility closures may be site specific or City wide depending on the nature of the emergency. Employees may be assigned to other locations for work or be placed in a 'work from home' status. Depending on the nature of the emergency, employees may be required to work during the emergency condition at the direction of the Department Head or City Administrator. Employees will be required to provide their Department Head with a phone number and location where they can be contacted should the emergency condition end and work can be resumed. During the closure of City offices, reporting employees (employees using earned leave are excluded) may be placed on "leave-with-pay" status. Employees who report to work but leave prior to the time the facility is officially closed, who cannot be contacted or are unable to return to work should the facility reopen, will be paid only for actual hours worked. They will be required to either make up the time absent from work or charge such time absent from work to accrued vacation, personal, or compensatory time leave. If a non-exempt employee does not have accrued vacation, personal, or compensatory time leave and is not able to make up that time during the same pay period, their work absence will be treated as unpaid leave.

  In addition to their regular pay, employees who are required to work in the elements during an emergency closure (ex: snow removal, police, etc.) shall accrue one (1) compensatory hour for each hour worked during their regular shift. Hours worked subsequent to an employee's regular shift will be subject to normal overtime rules **(See Section 3.7.2)** or 'call back' **(See Section 3.8.3)**. Only regular full-time and regular part-time employees shall be placed in a "leave-with-pay" status. During an emergency closure, part-time employees and seasonal

employees shall not report to duty and shall not be compensated in any way for time not actually worked.

- *Closure for more than one business day:* In the event an emergency causes a City facility to be closed for two (2) or more days, or in the event of unusual circumstances, pay allowance provisions for all employees shall be determined by the Mayor and/or City Administrator.

4.4.1c. Military Leave:

All employees who are members of the National Guard, Army Reserve, Naval Reserve, Marine Corps Reserve, Air Force Reserve, and Coast Guard Reserve, shall be entitled to a City-paid military leave of absence for not more than one hundred twenty (120) hours each calendar year. An employee shall be entitled to retain both their military pay and the City's military paid leave of absence. If an employee's military service extends past the City's allotted one-hundred twenty (120) hours for a calendar year, the employee may utilize any earned compensatory, personal, or vacation leave and/or will be allowed a leave of absence without pay for the duration of their service. If called to respond to a state of emergency declared by the Governor, an employee will not be eligible for ~~a~~ military leave with pay, but instead, they shall receive their normal compensation minus the state active-duty base pay they receive in active service of the state. When an employee is called into active duty for an extended period, the City shall follow the Uniformed Services Employment and Reemployment Act (USERRA). Unused military leave will not be paid upon termination of employment.

The City of Seward complies with the Family and Medical Leave Act (FMLA) as a covered employer and will grant eligible employees up to 26 workweeks of unpaid, job-protected leave in a 12-month period for military caregiver leave. To be eligible for leave under this policy, employees must meet all of the following requirements:

- Have worked for the City for a total of 12 months (can be non-consecutively); and
- Have worked for the City at least 1,250 hours over the twelve (12) months preceding the date the leave would commence. All periods of absence from work due to service in the uniformed services are counted towards this eligibility.

To qualify as FMLA leave under this policy, the leave must be for one or more of the following reasons.

- For a qualifying exigency arising out of the fact that a spouse, child, or parent is a military member on covered active duty or on call to covered active-duty status. Qualifying exigencies for which an employee may take FMLA leave include short notice deployment, making alternative childcare arrangements for a child of the deployed military member, care for the military member's parent, attending certain military ceremonies and briefings, counseling related to the deployment, military member's short-term R&R leave, post deployment activities, or making financial or legal arrangements to address the military member's absence.
- To care for a covered service member, either currently in Armed Forces or an honorably discharged veteran within past five (5) years—spouse, child, next of kin, or parent—with a serious injury or illness.

Section 4.5.2 provides more information.

4.4.1d Related to Work Operations:

An employee may be granted administrative leave with pay for the following

circumstances:

- To compete for positions of employment within the City's hiring process;
- To present grievances or appeals to City officials; or
- In the event of the death of a current City employee, to allow for coworkers to attend the funeral.

4.4.2 Funeral Leave:

A. Due to Immediate Family Member Death: In the event of death of an employee's father, mother, spouse, child (included step or adopted), daughter-in-law, son-in-law, mother-in-law, father-in-law, sister, brother, sister-in-law, brother-in-law, grandparents, grandchildren, or legal dependent, the employee may be allowed leave with pay for reasonable and necessary absence for arrangement and attendance to said funeral. Employee should define their relationship and location of the service on their submitted request to ensure the proper leave is issued—if these details are excluded, the request for leave may be denied. Family members not defined in the preceding sentences will be eligible for leave clarified in Part B.

   Leave with pay will be allowed up to the following maximums and will not be deducted from funeral leave as described in Subsection 4.4.2B: twenty-four (24) hours per person and per event for a regular full-time employee and twelve (12) hours for a regular part-time employee. If more than the maximum time is requested and approved, it will be deducted from an employee's earned compensatory, personal, vacation, or sick leave.

B. To Attend a Funeral, not eligible for 4.4.2A: For time of travel to attend a funeral in Seward County, leave with pay may be granted at a minimum of one (1) and a maximum of four (4) hours. For a funeral outside of Seward County, a minimum of one (1) and a maximum of eight (8) hours leave with pay may be granted. The maximum leave with pay allotted to an employee per calendar year is twenty-four (24) hours for regular full-time employees and twelve (12) hours for regular part-time employees. If an employee has expended their allotment for the year, the employee may request use of leave to be deducted from earned compensatory, personal, or vacation leave.

4.5 Instances of Approved Unpaid Leave

The following instances will allow an employee to maintain employment with the City of Seward while on unpaid leave. Unpaid leave will only be allowed if previously approved by the City Administrator in writing.

4.5.1 Voluntary Leave of Absence Without Pay

In limited instances, and only when all sources of leave—compensatory, personal, vacation, or sick leave—or when an employee is not eligible for the Family and Medical Leave Act (FMLA), a request for a voluntary leave of absence without pay will be considered. All requests for unpaid leave must be made in writing and submitted to the Human Resources Director with as much advanced notice as is possible. The written request must describe the reason for the leave, the date on which leave would begin and the date on which the employee expects to return to active employment. Any employee who is granted such a leave shall be limited to a maximum annual leave—based on a floating 12-month calendar—in accordance with their length of service as follows:

Years of Employment	**Max Unpaid Leave ~~allowed~~Allowed**
0 - 4.99	0 hours
5.0+	Up to 160 hours

Leave benefits--including sick, personal and vacation leave~~--~~—~~i~~ssued to employees by the City shall be reduced proportionately during the leave of absence; however, the employee will still accrue service time in this employment status.~~-~~ While on unpaid leave,

the employee must continue to pay their share of insurance premiums; therefore, arrangements will need to be made with ~~City Administration~~the Finance Director or their desgnee for this payment. Failure to report at the expiration of the leave of absence shall be considered a resignation of position.

4.5.2 Family and Medical Leave (FMLA)

The City of Seward complies with the Family and Medical Leave Act (FMLA) as a covered employer and will grant eligible employees up to 12 workweeks of unpaid, job-protected leave in a 12-month period for specified family and medical reasons.

A. Eligibility

To be eligible for FMLA benefits, an employee must:

- Have worked for the City for a total of 12 months (can be non-consecutively); and
- Have worked for the City at least 1,250 hours over the twelve (12) months preceding the date the leave would commence. All periods of absence from work due to service in the uniformed services are counted towards this eligibility.

To qualify as FMLA leave under this policy, the leave must be for one or more of the following reasons.

- The birth of a child or for placement with the employee for adoption or foster care.
- To care for a spouse, child, or parent who has a serious health condition.
- For a serious health condition that makes the employee unable to perform the essential functions of their job.
- For any qualifying exigency arising out of the fact that a spouse, child, or parent is a military member on covered active duty or on call to covered active-duty status.
- To care for a covered service member with a serious injury or illness.

B. Amount of Leave

An eligible employee can take up to 12 workweeks of FMLA leave during any 12-month period or up to 26 weeks for the FMLA military caregiver leave. The leave will roll backward to the date the leave was requested. Employees may request to take this time consecutively or intermittently—in all cases, the leave cannot exceed 12 workweeks or 26 workweeks for military caregiver leave. Eligible spouses who are both employed by the City may take only a combined total of 12 workweeks of leave for the birth of a child, for adoption or placement of a child in foster care, or to care for a parent (but not a parent 'in-law') who has a serious health condition—or 26 weeks to care for an injured or ill servicemember). Leave for birth and care, or placement for adoption or foster care, must conclude within 12 months of the birth or placement.

C. Intermittent Leave or a Reduced Work Schedule

Under some circumstances, employees may take FMLA leave intermittently–taking leave in separate blocks of time for a single qualifying reason/exigency, or on a reduced leave schedule–reducing the employee's usual weekly or daily work schedule. Any changes to an employee's normal schedule must first be approved by the Department Head and City Administrator in writing before incorporation. When leave is needed for planned medical treatment, the employee should make a reasonable effort to schedule treatment so as not to unduly disrupt the City's operation. If FMLA leave is for birth and care, or placement for adoption or foster care, use of intermittent leave is subject to the City's approval.

D. Employee Notice Requirement

All eligible employees requesting FMLA leave must provide verbal or written notice of

the need for leave to the Human Resources Director. When the need for leave is foreseeable, employees are asked to provide 30-days advance notice to take FMLA leave. If leave is foreseeable less than 30 days in advance, the employee must provide notice as soon as practicable - generally, either the same or next business day.~~—~~ Employees should provide sufficient information for the Human Resource Director ~~City Administration~~ to reasonably determine whether the FMLA may apply to the leave request.

Within five (5) business days after the employee has provided this notice, the Human Resources Director will complete and provide the employee with a FMLA Designation Notice, Notice of Eligibility and Rights, and may request a medical certification or other supporting documentation as is requested. At this time, the Human Resources Director will indicate how much leave the request qualifies for under the FMLA.

E. Employee Status and Benefits During FMLA Leave

An eligible employee on this unpaid leave will still be considered a City employee and will still continue to accrue their service time. The City will continue an employee's health insurance coverage during the FMLA leave period at the same level and on the same terms as if the employee was continuously at work. While on unpaid leave, the employee must continue to pay their share of insurance premiums; therefore, arrangements will need to be made with ~~City Administration~~the Finance Director or their designee for this payment. In some instances, the City may recover premiums it paid to maintain health coverage for an employee who fails to return to work from FMLA leave.

F. Employee Return to Work after FMLA Leave

The City requires employees returning from leave for their own serious health condition to submit a certification that they are able to resume work. If reasonable safety concerns exist, the City may, under certain circumstances, require such a certification for employees returning from intermittent FMLA leave. Upon return from FMLA leave, an employee will be restored to their current position, or an equivalent job with equivalent pay, benefits, and other terms and conditions of employment. An employee's use of FMLA leave will not result in the loss of any employment benefit that the employee earned or was entitled to before using FMLA leave. An employee has no greater right to restoration or to other benefits and conditions of employment than if the employee had been continuously employed.

4.6 Health/Retirement Benefits

The City offers a total compensation plan ~~consisting not only of hourly or salaried pay, but also of substantial employee benefits.~~for eligible City employees. The Human Resource Director shall make information available concerning current benefits. Some benefits may be provided only at an employee's expense or eligible to certain employee classifications. Participation in the insurance programs shall be voluntary. The current program will outline any waiting period or pre-existing condition stipulations. **Only regular full-time employees are eligible for the benefits contained in this section.**

4.6.1 ~~Hospital and~~ Medical Insurance

All regular full-time employees shall be offered an opportunity to enroll in health insurance on the first day of employ, which will then take effect in the subsequent month. Dependents of regular full-time employees shall be provided health insurance at the employee's request. The percentages that the City pays and the employee pays will be established during the budget process and employees will be notified of any changes on a yearly basis. Payroll deductions will be made for the employee portion of the premium.

4.6.2 Dental Insurance

The City shall incur the full cost to insure dental insurance for employees. Dependent dental insurance may be purchased through payroll deduction as specified by the employee's enrollment.

4.6.3 Vision Insurance

An employee shall incur full costs for coverage of themselves and their dependents for vision insurance. Enrollment for employee or dependent coverage will result in a payroll deduction.

4.6.4 Life Insurance

The City will offer to pay the costs to insure each eligible employee up to $25,000. An employee may choose to purchase further coverage for themselves or their family at an additional cost paid solely by the employee. Enrollment for additional coverage will result in a payroll deduction.

4.6.5 Retirement Systems

The City agrees to pay an adopted percentage. Employees will be advised of the percentage and are to have the same percentage deducted from their payroll to be paid into a retirement fund as per contract with the City's Retirement Plan Company. Overtime will not be included in figuring the percentage for regular full-time employees but will be included in figuring the percentage for Police Officers. Retirement for Police Officers will be governed by the City of Seward Police Pension Plan Document, which will be in accordance with Ordinance Number 913 and Nebraska State Statute. Any full-time employee is allowed to make additional contributions to their own retirement plan or the City of Seward 457 Deferred Comp Plan, in accordance with the Retirement Plan provisions.

SECTION 5: EMPLOYEE DEVELOPMENT

5.1 Employee Orientation

Employees within the regular full-time or regular part-time classification will serve in an introductory period for the first six (6) calendar months of employment **(See Section 1.5)**. The purpose of this is to permit the department head to closely observe and evaluate the capabilities and willingness of the new employee. During this time, the City shall encourage and assist the new employee in making a successful adjustment to working for the City.

The Human Resource Director shall be responsible for any orientation related to any salary or wage information as well as the employee personnel handbook. Each department head shall be responsible for facilitating the adjustment of an employee to their work situation by:

1) Preparing their workspace to adequately allow for execution of duties.
2) Providing clear performance expectations and objectives so the new hire understands what is expected and their responsibilities.
3) Discussion of the performance evaluation system and how they will be measured after their introductory period.
4) Introduction to members of their department or any other individuals with whom they will be working with regularly.
5) Instruction and guidance in learning to perform their job function.
6) Frequent discussion regarding the progress in learning and performing the work.
7) Discussion of any goals, objectives, or certifications/licenses to achieve in their first performance evaluation period.

5.2 Employee Development

The City Administrator and Human Resource Director, in coordination with department heads shall establish appropriate programs to develop the capacity of employees to render more effective service to the City. Such programs may include formal courses, seminars, workshops, demonstrations, directed readings, special assignments and other activities designed to improve employee knowledge, skill and job effectiveness with due consideration for the personal career objectives of employees and the enhancement of equal employment opportunity. Employee development activities shall be conducted during regular working hours to the extent possible.

5.2.1 Conferences and Education

The City encourages the development of job skills by allowing participation in available conferences, training sessions, and applicable business meetings whenever possible and economically feasible. Attendance of City employees at such meetings should be identified prior to establishment of the annual budget.

A. *Approval and Arrangements:* Prior approval shall be required from the Mayor or City Administrator and assigned department head for attendance by the elected body or City employees at available conferences, training sessions, and business meetings. Employees shall make appropriate advanced arrangements for transportation, hotel accommodations, and activity attendance—the City will fund or reimburse an employee for such arrangements as are needed. The least expensive practical mode of transportation shall be authorized. If the event is not held in a hotel and would require an overnight stay, attendee shall utilize the **U.S. General Services Administration (GSA)** to determine the maximum allowable lodging expenditure.
B. *Authorized Expenditures:* The following expenditures will be authorized at the discretion of the Mayor, City Administrator or department head in regards to previously approved attendance at an employee development opportunity. Please note, that no request for reimbursement will be issued for any expenses incurred without a valid receipt approved by the Mayor, City Administrator or assigned

department head.

1) **Registrations:** The City shall pay the registration costs, tuition costs, or fees for an employee to attend required/approved conferences, training sessions and business meetings. All registrations must be made in a timely manner in order to receive any discounts in the fees. Anyone who registers for an employee development opportunity will be required to be in attendance. If, for some reason an employee is not in attendance with no unavoidable reason provided, the City will require reimbursement of all associated fees. Non-attendance with an unavoidable reason provided will be reviewed and approved at the discretion of the Mayor or City Administrator.
2) **Travel to Authorized Function:** When automobile transportation is appropriate to attend an engagement out of the area without an overnight stay, use of a City-owned vehicle is the preferred mode. If a City-owned vehicle is not available, the engagement includes an overnight stay, or if the City Administrator authorizes the use of a personal vehicle, the employee shall be at the established **U.S. General Services Administration (GSA) rate per mile.** Odometer readings shall accompany any mileage reimbursement requests. Employees may also submit a reimbursement request for any parking or storage expenses while on this travel. Employees using City vehicles are individually responsible for all fines or penalties assessed to the employee as a result of speeding tickets or other traffic offenses for which the employee is cited during travel to and from the authorized event.
3) **Per-Diem Meal Reimbursements:** Employees in pre-approved travel status may be eligible for a flat-rate per-diem reimbursement if certain conditions apply:
    - Travel was previously requested and approved by supervisor prior to embark.
    - Breakfast may be reimbursed if the employee enters travel status before 6:30AM or had an overnight stay the night before. A flat rate will be paid based on the location of embark or hotel location of stay.
    - Lunch may be reimbursed if the employee enters travel status before 11:00AM or returns from the previous night's stay at or after 2:00 PM. A flat rate will be paid based on the location of the employee's meal location.
    - Supper may be reimbursed if an employee enters travel status after 5:00 PM or returns from the previous night's stay at or after 7:00 PM. A flat rate will be paid based on the location of the employee's meal location.

    Meals will be reimbursed at a flat, established rate per meal instituted by the **U.S. General Services Administration (GSA)** for the approved employee development or business travel event. This practice shall apply to both in- and out-of-state travel. Attendee shall reference gsa.gov and associated location(s) to determine the expected amount to be reimbursed for qualifying meals. An employee must include or verify the following items for consideration of a meal reimbursement request:

    i. Reimbursement will only be given while the employee was performing services as an employee.
    ii. An employee must include the following information with a reimbursement request:

1. For Breakfast - Date, Time and location of embark or hotel stay.
2. For Lunch – Date, time, and location of embark and meal location (City, State).
3. For Supper – Date, time and location of embark and meal location (City, State).
4. **An employee must submit documentation confirming their reimbursement request, including details for each requested meal, within five (5) business days from return of travel event for consideration of per-diem reimbursement. NO receipt will be required for submittal.** Requests submitted after this time period may be approved at the discretion of the department head and/or City Administrator.

For ease of City accounting, it is requested the employee use a personal form of payment and submit a request for per-diem reimbursement upon return.

4) **Out-Of-State Travel:** Attendance of employee development opportunities within the state of Nebraska is always the preferred option. Should no equivalent opportunity exist locally, a request for approval of out-of-state travel may be considered and approved at the discretion of the Mayor or City Administrator. Such request shall include a copy of any conference brochure, an itemization of anticipated costs, a statement of the purpose of attendance in terms of what the participant hopes to accomplish and how the City will benefit, and a proof that a comparable activity is unavailable in Nebraska or impractical to attend. If air travel is proven to be the more economical option based on time and cost considerations, the employee shall book and will be eligible for reimbursement only for travel in the economy class. Upon completion of the travel, the participant may be requested to prepare a report for the City Administrator assessing the value of the activity and how it may benefit City operations.
5) **Hours of Attendance:** Any hours of attendance or travel time to the employee development event over the regularly scheduled work hours as prescribed for that employee, shall be flexed as time-off during the same pay period whenever feasible. If the department head determines that time-off is not feasible, full-time employees will be allowed to accrue these hours as compensatory time or receive overtime pay. Time utilized for social hours, non-business meals, or personal business are not to be included in hours of attendance.

5.2.2 College Credit Reimbursement Policy

The City shall provide financial assistance on a reimbursement basis to a full-time employee, for pre-approved job-related college credit courses. An employee must submit a written request to the City Administrator at the start of each quarter/semester, which specifically explains how the course directly relates to their position and will enhance their job skills/abilities. To receive financial assistance, the employee must provide City Hall with proof of successful completion of the course along with documentation (billing statements/receipts) of course tuition, books or laboratory fees. The employee will be reimbursed up to fifty percent (50%) of all eligible costs at the determination of the City Administrator.

5.3 Employee Evaluations

The work performance of each regular full-time or regular part-time employee, who has completed their introductory/evaluation period, shall be evaluated on a semi-annual basis, for

periods ending September 30th and March 31st. The primary reason for performance evaluations is to identify employee strengths in order to reinforce good habits and identify and develop plans for improvement in deficient aspects. This review also serves to make employees aware of and to document how their job performance compares to the ~~goals~~ expectations and responsibilities of their position. A supervisor shall informally provide day-to-day feedback and counseling outside of the employee evaluation to ensure that expectations are being met to encourage a successful evaluation rating. The City strives in assisting employees in the development and progression of professional abilities to achieve personal, as well as work-related goals; therefore, any goals identified for the coming evaluation period should be formulated with employee development in consideration.

A formal evaluation, on the prescribed form(s), shall be made by the department head or the employee's immediate supervisor. The evaluation shall become official when reviewed and approved, with any necessary modifications, by the City Administrator. Employees shall be shown copies of their performance evaluations for discussion and for acknowledgment by signature. Employee evaluations shall be kept with the employee file when completed. Employees disagreeing with their evaluations may seek adjustments through use of the appeals procedure, as specified in **Section 7**.

5.3.1 Performance Evaluation Process

In preparation for an upcoming evaluation period, the following steps should be undertaken to ensure fair and effective evaluations:

1. Prior to the start of the next evaluation period, an immediate supervisor or department head should consult with an employee to establish realistic~~, specific, and measurable goals~~ expectations which will further employee development and enhance departmental operations.
2. ~~Proposed goals shall be reviewed and approved by the department head, signed by the employee, and forwarded to the City Administrator for review prior to the April 1st or October 1st start of the evaluation period.~~
3. ~~3.~~2. Supervisor shall provide informal day-to-day consultations about an employee's progress versus stated ~~goals or~~ expectations. Supervisor shall note any observed behaviors, significant incidents, accomplishments, negative performance or disciplinary actions within the six-month evaluation period.
4. ~~4.~~3. Near the conclusion of the current evaluation, immediate supervisor or department head shall take into account observed behaviors and performance and consider evaluation ratings. The supervisor shall schedule a private and uninterrupted meeting with the employee after ratings have been completed.
5. ~~5.~~4. The employee shall be provided a copy of the evaluation prior to the evaluation meeting.
6. ~~6.~~5. The evaluation meeting shall include the following elements:
    a. A setting where the employee is able to express themselves freely.
    b. Reinforcement of positive behaviors and discussion of shortcomings.
    c. Identification of any underlying personal or work-related problems the employee is experiencing which may negatively affect performance.
    d. Planning of realistic~~, specific, and measurable goals~~ expectations for the subsequent evaluation period based on evaluation of current progress.
7. ~~7.~~6. Following the evaluation meeting, the employee, department head, and City Administrator will review and sign the document which will become part of the employee's permanent record.

5.3.2 Effects from Performance Evaluation Rating

As specified in **Section 3.4**, an employee must maintain at least a 'Meets Expectations' average cumulative rating for both semi-annual evaluations to be eligible to move to the

subsequent step. Step advancement, and new rate of pay, will be effective each April 1st. An employee that achieves below a 'Meets Expectations' average cumulative rating for both semi-annual evaluation periods shall not be eligible for step advancement, may be subject to a probationary period of performance review as specified by the City Administrator, or may face disciplinary action up to and including termination of employment. An employee that achieves below a 'Meets Expectations' average cumulative rating for any semi-annual evaluation period shall be subject to a Performance Improvement Plan (PIP) created by their Department Head or City Administrator in conjunction with the HR Director. The PIP shall address specific actions, timelines, and regularly scheduled and documented follow-ups to improve identified deficiencies.

5.4 Employee Awards Program

At the discretion of the Mayor, the City of Seward may provide one recognition dinner each year for the elected body and employees of all classifications. The maximum cost for such dinner shall be established in the budget process and compliant to any Nebraska statutory limitations. Employees shall be recognized for the following service milestones with presentation of a certificate and a gift of appreciation in the following amounts:

Years of Service	Gift Amount	Years of Service	Gift Amount
10	$ 50.00	15	$ 75.00
20	$100.00	25	$125.00
30	$150.00	35	$175.00
40	$200.00	45	$225.00
50	$250.00		

SECTION 6: EMPLOYEE DISCIPLINE AND SEPARATION FROM EMPLOY

6.1 Corrective and Disciplinary Actions

Employees of the City are expected to act in a mature and professional manner while performing services for the City. It should be noted that an employee working for the City is viewed in a public light; therefore, off-duty conduct should also positively espouse the qualities that brings credit to the City. The following section sets forth general guidelines regarding unacceptable conduct in the workplace. However, your employment with the City does not create a contractual relationship, and as an 'at-will' employer the City may terminate an employee's employment regardless of whether unacceptable conduct was engaged or not. Disciplinary procedures for sworn Police Officers shall be governed by the procedures included in the Civil Service Rules & Regulations in accordance with State Law and adopted by the City Council.

It shall be the responsibility of all supervisors to supervise reasonably and impartially, and when necessary, recommend disciplinary procedures upon the personnel assigned to them. A recommendation for disciplinary action shall be lodged with the Human Resource Director, who will then review with the City Administrator to determine the appropriate response to the infraction(s) raised. Depending on the severity of the infraction(s), an employee may be subject to discipline up to and including termination. The following forms of disciplinary action may be considered at the discretion of the City Administrator in coordination with the Human Resources Director: oral reprimand; written reprimand; suspension, with or without pay, or demotion to a lower classification; formal notice of unsatisfactory job performance requiring a six-month evaluation period of fitness to continue service; or immediate dismissal from City service. Disciplinary action may affect an employee's request for transfer, promotion within City service, or achieving subsequent steps in the City's pay plan structure. Failure of an employee to report an observed disciplinary matter in an expedient manner may result in the employee receiving discipline up to and including termination. For appeals to disciplinary action, please consult **Section 7** which describes the process.

The following is a list (not all-inclusive) providing examples of unacceptable conduct:

1) Failure to observe safety precautions or operating procedures that may or do result in injury, property damage or death. Failure to report to assigned department head anticipated treatment or surgery for a work-related injury.

2) Failure to report to work at the appointed time or place; or absence without leave; or taking unauthorized or excessive time for lunch or rest break; or unauthorized early departure from duties with or without proper relief.

3) Unauthorized solicitation, or distribution or display of, unauthorized literature during regular work time.

4) Conducting excessive personal business on City time, including excessive use of cell phone.

5) Discourteous or unprofessional behavior to a member of the public or another City employee.

6) Abuse, misuse, neglect, sabotage, or waste of City property.

7) Horseplay, loafing, or sleeping while on duty.

8) Slander, defamation, backbiting or subversion of other employees, supervisors, managers, or elected officials.

9) Use or attempted use of intimidation or coercion to obtain an advantageous result.

10) Violation of City policies and procedures, as specified in writing or verbally

understood.

11) Unauthorized obtaining, use or communicating release of confidential, sensitive, or privileged information.

12) Intentional unavailability for, refusal, or inability to maintain physical/mental readiness to work during a call-back event or in the case of a community disaster.

13) Abuse of sick leave or other paid leave.

14) Conduct unbecoming of a City employee, tending to be prejudicial to the reputation on the City government, or otherwise contravening the public interest.

15) Failure by an employee to assume responsibility or exercise diligence, intelligence and interest in the pursuit of assigned duties either in quality or quantity, or whose performance is below acceptable standards as established in the performance evaluation system.

16) Insubordination, including the willful refusal to comply with lawful order of higher authority. The term 'lawful order' shall mean a directive authorized by law, rule, or regulation.

17) When required by job description and duties to possess a driver's license or Commercial Driver's License, suspension, revocation of or inability to possess a driver's license, including the inability for the City to obtain automobile insurance of the employee due to infractions.

18) When required by job description to obtain or retain required licenses, certifications, or classifications, the inability or failure to do so in the timeline provided in the approved job description.

19) Theft of public or private property, or property belonging to the City including misappropriation of any City property.

20) Unlawful harassment.

21) Consumption, being under the influence of, or possession of non-prescribed drugs or alcohol while on duty. Failure to notify a supervisor of prescription drugs that may impair an employee while on duty.

22) Unauthorized or improper use of official authority, including making false statements in connection with any official duties.

23) Acceptance of any bribe for performance or non-performance of duties.

24) Conviction of a Felony or a Class I Misdemeanor.

25) Gambling during regular work hours or on City property.

26) Fraud, falsification, or deceit in the conduct of City business or of any City document or record.

27) Unauthorized possession or use of firearms or hazardous materials during regular work hours or on City property.

28) Work disruption or stoppage, engaging in a strike, work stoppage or slow down, or other forms of job action withholding timely delivery of City services.

29) Acts or threats of physical violence directed towards City officials or employees, or any third-party during work hours, duties, or functions. Fighting while on duty.

30) A supervisor who knowingly issues an order requiring a subordinate to commit an illegal act and an employee who knowingly obeys an order requiring committal of an illegal act.

31) Failure to report an observation of the above notated items of unacceptable conduct to department head and/or Human Resource Director.

6.1.1 Investigative Leave

When an employee is under investigation for a crime or official misconduct or is awaiting hearing or trial in a criminal matter, they may be placed on investigative leave—with or without pay—for the duration of the investigation or proceedings if necessary to protect the public interest. Such suspension action shall require the approval of the Mayor or City Administrator, or appropriate authority and any return to duty shall be under such terms and conditions as may be specified by the Mayor or City Administrator, or appropriate authority.

6.2 Separation from Employment

Employment for non-appointed and non-contracted positions with the City is on an "at will" basis. Employment "at will" means that either the employer or the employee may terminate the employment relationship at any time, with or without cause, and with or without notice. Contracted employees may be removed as per the terms outlined in the employment agreement. Per Nebraska statutory requirements, removal of appointed officers **(found in City Code Chapter 85)** of the City may be recommended by the Mayor with approval of a majority of the City Council present at a regular meeting. Permanent employment or employment for a specific term is neither guaranteed nor promised to any employee.

Employees separating their employment with the City, whether through layoff, dismissal, resignation, or retirement, shall be responsible for returning any City property that they have in their possession. Such property as identification cards, badges, keys, etc., must be returned to the department head or Human Resource~~s~~ Director on the last day of employment. Additionally, an exit interview shall be arranged on the employee's last day of active service. Employees who leave service in good standing may qualify for re-employment as provided in **Section 1.4**.

6.2.1 Reduction in Force (Layoff)

As an "at-will" employer, a non-appointed or non-contracted employee may be laid off because of a reduction in required personnel, reorganization of a department or City Function, a decrease in workload, or a lack of funds. Whenever possible, employees who are to be laid off in one department shall be integrated into another department by transfer. Determinations of department transfer will include the following determinations: length of City service; performance record; acquired certificates and licenses; and knowledge, skills, education, and abilities.

For those employees not covered by State Civil Service laws, the following procedure will be utilized when a layoff is necessary:

1) The City Administrator will determine how many employees are to be reduced from the payroll.
2) The City Administrator will determine by skill levels, work record and length of service, who are the employees to be reduced.
3) The City Administrator will determine those employees who are in critical jobs which are exempted from this procedure. A critical job is defined as one which requires special skills, education, training, or specialized knowledge.
4) The City Administrator will review any lay-off determination with the Mayor and City Council prior to issuing formal notice to affected employees.

The City will provide at least two (2) weeks' written notice of a layoff prior to the effective date unless an emergency exists. The written notice shall include the reasons for the action as well as last date of work and benefit coverage information. Within two years following the effective date of the reduction in force, any person terminated solely because of the reduction in force shall be afforded an opportunity for reinstatement to the same position from which the termination occurred or a position below the former position, provided that the person is qualified to perform the duties of the position and such reinstatement would be in the best interest of the City.

6.2.2 Dismissal from Employment

Dismissal of a non-appointed or non-contracted employee may occur if an infraction, or series of infractions, are so grave in nature that continued employment would affect the operational effectiveness of the department. In these instances, the department head shall confer with the City Administrator describing the infraction(s) and the reason(s) for recommendation of dismissal. The recommendation shall be reviewed by the City Administrator after consultation with the Human Resource Director. If it is determined that dismissal should occur, written notice of such determination shall be given to the affected employee and the Human Resource Department for inclusion in the employee's personnel file. The notice shall clarify the infraction(s) committed and the last date of employment as well as the deadline to appeal the action via writing. Please refer to **Section 6.2** for a description of the dismissal of appointed employees.

6.2.2a Failure of Six-Month Introductory/Evaluation Period

At any time during the six-month introductory or evaluation period, an employee may be dismissed from the City service or may be reassigned by lateral transfer or demotion if their conduct, quality of work and/or fitness are insufficient to continue in the position. See **Section 1.5.1** for further information**.**

6.2.3 Resignation from Employment

All appointed officials as defined by City Code and without a contract, who desire to resign in good standing, shall provide a written resignation to the City Administrator a minimum of forty-five (45) days prior to the effective date of their resignation. Non-appointed employees, without a contract, who desire to resign their position in good standing, shall provide a written resignation to the Human Resources Director at least two (2) weeks prior to the effective date of their resignation. Earlier notification is preferred if possible. Accrued non-sick leave will not be allowed during the final two (2) week time period, except by agreed upon, written conditions between the employee and the Mayor or City Administrator. Compensation for any accrued, eligible leave balances, in accordance with **Section 4.2.3** and **Section 4.3.4,** will be issued to the employee with their final paycheck.

6.2.4 Retirement from Employment

An employee is eligible for retirement when they've reached the age of 'full retirement' or 'early retirement' as defined by the Social Security Administration. An employee may continue their employment beyond the full retirement age if they desire and remain capable of performing the mental and physical responsibilities as defined in their associated job description. In these instances, and at the discretion of the City Administrator, employee may be required to undergo appropriate examinations to determine whether they should continue in employ if signs are observed of them not being able to perform the duties required by the position.

An employee who qualifies for retirement will be entitled to their benefits as outlined in **Section 4.6.5** as well as payout for any accrued, eligible leaves in accordance with **Section 4.2.3** and **Section 4.3.4.**

SECTION 7: EMPLOYEE APPEALS

It is the preferred option for employees to informally take any job-related complaints, evaluation appeals, or questions about disciplinary action to their immediate supervisor for resolution. The City does not tolerate any form of retaliation against employees availing themselves of this procedure. The procedure should not be construed however, as preventing, limiting, or delaying the City from taking disciplinary action against any individual, up to and including termination. **Note:** For Police Department employees subject to the Civil Service Act, the appeals procedure for any topics established in the Civil Service Commission Rules & Regulations governs. The following types of appeals fall under this category:

- *Disciplinary*: The City strives to provide fair and equitable treatment to all employees and to provide a welcoming atmosphere. If an employee feels disciplinary action was unjustly applied or if an employee is experiencing an unwelcome atmosphere, an appeal or complaint can be made.
- *Performance Evaluation*: By their very nature, performance appraisals are subjective, even though they include objective performance standards. Immediate supervisors and department heads are in the best position to evaluate an employee's work performance and work behavior. For this reason, the Human Resource Director will not attempt to substitute their judgment for the supervisors unless an employee can demonstrate that the evaluation was arbitrary, capricious, illegally discriminatory, or just plain wrong based on verifiable data. If an employee feels they have been incorrectly evaluated, an appeal can be made.
- *Handbook Interpretation*: The basis of the handbook is to provide a transparent, equitable, and consistent opportunity for all City employees by providing good working conditions, opportunity for advancement, consideration for employee welfare and a basis for understanding the conditions of City employment. If an employee feels an item within the handbook has been handled incorrectly by a department head or City Administration, an appeal can be made.

7.1 Procedure

An employee wishing to file an appeal or complaint, should follow the formalized procedure as identified below:

Step One: If an employee wishes to file an appeal or a complaint, it shall be presented in writing to their department head within five (5) business days from the time of occurrence. The appeal/complaint shall clearly state the basis and the relief requested. The department head will review the complaint with the City Administrator and Human Resource Director. Upon completion of review, the department head shall respond to the employee in writing within five (5) business days after receipt. Meetings may be held within this timeframe with the employee, and any other witnesses, to discuss the complaint in further detail or to complete an investigation.

Step Two: If an employee still feels the answer is not satisfactory, they may appeal the decision in writing to the Mayor within five (5) business days after receiving the written response from the department head. The Mayor will investigate the complaint within ten (10) business days. The investigative process may include any of the following: a review of the written summary of the employee's statement, a review of the department head and City Administrator's findings, discussions with all witnesses or individuals concerned, and a further investigation by the City's Labor Attorney if necessary. Meetings may be held within this timeframe with the employee, and any other witnesses, to discuss the complaint. After the investigation is completed, the Mayor or City Attorney will advise the employee in writing of the results and decision based on that investigation. The decision will be final and binding.

ATTACHMENT A: SELECTED DEFINITIONS

ANNIVERSARY DATE: The calendar date upon which employment started with the City of Seward by a specific employee.

COMPENSATORY TIME-OFF: Time off with pay in lieu of overtime pay for irregular or occasional overtime work, for either full-time exempt or non-exempt employees. Overtime hours should be authorized in advance by the department head.

CONTINUOUS EMPLOYMENT: The time from original employment to the current date of employment without separation.

BUSINESS DAY: Any day in which normal business operations are conducted. The normal schedule of business operations is 7A – 4P on M-F for non-Police and non-Library personnel.

CALENDAR DAY: Each day shown on the calendar beginning at 12:00 midnight, inclusive of Saturdays, Sundays, and Holidays.

DEPARTMENT: A major functional unit of the City of Seward governmental structure.

DEPARTMENT HEAD: A person directly responsible for the administration of a City department.

DISMISSAL: The end of an employee's service to the City by choice of the employer (City).

EMPLOYEE: An employee may be defined as:

1) Regular, full-time. This employee works 2080 hours per year and is eligible for full benefits.
2) Regular, part-time. This employee works a minimum of 1,040 hours over a 12-month period and is therefore eligible for fringe benefits on a prorate basis.
3) Part-time. This employee works less than 1,040 hours over a 12-month period and is therefore not eligible for fringe benefits.
4) Seasonal. This employee may work up to 40 hours weekly for a specified period of time.

EXEMPT EMPLOYEES: Employees paid on a salaried basis and whose primary duties and responsibilities meet the Fair Labor Standards Act criteria for executive, administrative or professional exemption from eligibility for overtime compensation.

NONEXEMPT EMPLOYEES: Employees paid on an hourly basis and whose primary duties and responsibilities meet the Fair Labor Standards Act criteria for mandatory eligibility for overtime compensation and minimum wages.

EMPLOYEE EVALUATION SYSTEM: A systematic way to examine how well an employee is performing their job against pre-determined standards and goals agreed by the employee and department head. Employees shall be evaluated after their initial six months on the job to determine fitness; and thereafter, semiannually (October 1st and April 1st).

EVALUATION PERIOD: A six (6) month time period—either April 1-September 30 or October 1–March 31—where an employee shall be required to demonstrate their continued fitness for the position through their actual performance of their expected duties and responsibilities.

FITNESS FOR WORK: When an employee is in a state (physically and psychologically) to perform the tasks assigned to them competently and in a manner which does not compromise the safety of themselves or others.

GOOD STANDING: A resignation giving the City at least two (2) weeks written notice in advance of the last date of service for non-appointed positions, or at least 45 days written notice for appointed positions.

GRIEVANCE: Any concern, problem, or complaint that an employee has relating to employment conditions or relationships. An employee is encouraged to follow the complaint procedure.

HOLIDAY: The twenty-four (24) hour period starting at midnight and ending at midnight of the day observed.

INTRODUCTORY PERIOD: An employee's first six months on the job which will determine their fitness to meet expectations of assigned duties and responsibilities. If they are determined to be 'fit' they will continue with City employment.

LAYOFF: The temporary or permanent separation of employment by the employer for reasons unrelated to the employee's performance.

LEAVE: An authorized absence from regularly scheduled work hours which has been approved by proper authority.

- EARNED LEAVE: The leave earned by an employee by continuous employment with the City. Types and accrual amounts shall be determined by the Council and are specified in the handbook.

OVERTIME: Authorized time worked by an employee in excess of their total normal working hours per week, pay period, or for hours worked when an employee is called in to respond to an emergency.

REPRIMAND: A form of disciplinary action—either verbal or written—which informs the employee that their behavior or work performance is not meeting expectations. Direction should be provided to instruct the employee in how to correct and avoid repeating the mistake, infraction, deficiency, or problem.

SEPARATION: The end of an employee's service to the City, either by choice of the employee or employer by layoff, resignation, retirement, or dismissal.

SUSPENSION: A formal disciplinary action relieving an employee from their duties without pay for a specified period of time.

- ADMINISTRATIVE SUSPENSION: When an employee is relieved of their duties for a specific period of time without any loss of pay for internal investigatory purposes.

TERMINATION: See "Dismissal" above.

TOBACCO PRODUCT: Any product made or derived from tobacco, or containing nicotine from any source, that is intended for human consumption.

WORK PERIOD: For all employees, other than law enforcement officers, the work period shall begin at the end of the shift on Friday and conclude at the end of the shift on the Friday following a seven-calendar day period. For law enforcement officers, the work period shall begin at the end of the shift on Friday and conclude at the end of the shift on the Friday following a fourteen-day period. Non-exempt employees may only work during their scheduled work shift, and all off-shift work is strictly prohibited without pre-authorization by the Department Head or appropriate authority. Working unauthorized overtime is grounds for disciplinary action, up to and including termination of employment.

WORKERS' COMPENSATION: Provision of medical expenses, lost wages, and rehabilitation costs to employees who are injured or become ill 'in the course and scope' of their job, as determined by the applicable state laws.

WORKING TIME: All hours spent performing the duties of an assigned job; travel between job sites during or after the employee's regular hours of work (where no overnight expenses are involved); rest periods allowed during the employee's regular hours of work.

ATTACHMENT C: UPDATES TO HANDBOOK TRACKING

All changes to the introduction through Section 7 will be approved by Council action. Attachments A&B will be updated as Administraiton sees fit. Below, please find the tracked changes through Council action:

Date of Change	Section(s) Included	Summary of change
12/3/24	3.8.2; 4.4.1b	Better Define on-call compensation for SCADA, inclement weather; Specify if employee can't report back to office they will only be compensated only for hours worked

P.O. Box 38, 537 Main Street, Seward, Nebraska 68434. Phone: 402-643-2928. Fax: 402-643-6491. www.CityofSewardNE.gov

Date: March 17, 2026

To: *Mayor Eickmeier and City Council*
From: *HR Director Bargmann*
Re: Employee Handbook Review – 2025-26 Updates

Working with City Administrator Butcher, below, you will find some highlights from a complete review of the handbook as was adopted on 8/15/23 and updated 12/3/24. There were some items that needed further clarification; therefore, I am drafting a memo to inform you of the proposed changes as well as an attached redlined version of the changes. The idea is to identify the topics that may have the most impact if implemented.

A redline version was provided to the Personnel, Finance and Audit Committee and discussed at a meeting on March 3rd – the Committee recommended the redline version be brought forward. Employees were also provided with a copy of the same redline version and memo and were given a week for review/comment. Some comments were received and they have been considered in this final draft. If the proposed changes are approved, they will go into effect immediately.

1.1 Classification of Employees
The changes will indicate which employees are eligible for overtime and which employees will be evaluated. Dowding Pool employees are exempt from overtime due to FLSA Section 13(a)(3) because the facility is open less than seven months a year. If an outdoor pool has multiple positions and exceeds 40 hours, overtime will be calculated.

2.9.1 Smoke Free Policy
Clarifies that vaping is not allowed in vehicles or within City buildings. Provides clarification to the City's stance on smokeless tobacco products – employees must clean up after themselves.

2.9.4 Use of City-Owned Vehicles
Clarification that employees (excluding Police) are not allowed to take City vehicles outside of the extra-territorial jurisdiction of the City unless previously approved by supervisor. Department Heads are given a little more latitude but should always use good judgment. Additionally, clarifies that employees may be allowed to take a City vehicle to their residence within City limits in limited circumstances and with authorization from supervisor.

3.4 Annual Performance Pay
Information about the performative annual payment will now be subsection 3.4.1. The only change to this section is identification an increase in 'step' will be effective the first full pay period after April 1st – it is difficult for the system to incorporate a change to wages during an active pay period.

> **3.4.1 Performative Pay**
> Previously, the annual 'bonus' was provided to employees that achieved a 'meets expectations' on their employee performance review and had been at 'step 9' for a calendar year since the preceding April 1st. In consultation with the Fair Labor Standards Act (FLSA), it was determined this would be considered a discretionary bonus and comply with the stipulations of this section. As such, City Administration worked with our Labor Attorney to revise language in this section. This section now identifies the performative annual bonus will be discretionary as determined by the City Council. This performative annual bonus will not be guaranteed for meeting performance metrics as set forth in the performance evaluation process. **It is expected that the performative annual bonus will continue as it previously has for the foreseeable future.**

3.6 Recording of Work Hours
Per the Caselle software, system rounds time clocked in to nearest 5-minute increment—previously was 15-minute increment in previous software. Identifies that a shift spanning midnight will be counted for two separate days – previously was treated as a continuous shift.

3.7.2 Overtime Pay
Clarification on what hours are included in overtime determination – hours worked, holidays, and hours taken as leave are included in this calculation.

3.8.1 Compensatory Time
Previously there was ambiguity related to conversion of double time holiday rate conversion to compensatory time calculations. It will not be converted to compensatory time and will instead be paid out if accrued. Previously, the Golf Shop Manager was allowed to 'bank' 480 hours of compensatory time, this will no longer be allowed. Finally, more specific language about use of 'flex' time for exempt employees is included to ensure record keeping is consistent for audit purposes.

3.8.4 Court Pay for Sworn Personnel
New section added to address how court appearances will be handled for sworn personnel – minimum of two hours clock in time to be given. Eligible for overtime pay if 80 hours in pay period exceeded.

4.1 Holiday/Annual Personal Leave
Subsection 2 updates language regarding leave for sworn police personnel. Subsection 3 provides clarity to employees that may be scheduled for events during an observed holiday (ex: 4th of July) with the clarification to receive eight hours holiday compensation and the preference to alter weekly hours to avoid overtime.

4.2 Vacation Leave
New language reflects incorporation of the Caselle system and biweekly accrual of vacation leave hours.

> 4.2.2 Vacation Leave Cap
> Changes reflect the updated Caselle leave system and leave caps incorporated previously.

4.3 Sick Leave—including Leave for Injury
There are no changes to the leave amount or accrual limit. A table is now included to identify the biweekly accrued and display in the same manner as vacation leave.

> 4.3.1 Eligible Uses of Sick Leave
> Though we are exempted from the Family Leave Act, we have reviewed and matched the eligible persons in which an employee can use sick leave.

4.4.2 Funeral Leave
Subpart B identifies that funerals within Seward County are considered 'local' and thus will be allowed a max of 4 hours, previously the handbook indicated 'Seward'.

5.3.1 Performance Evaluation Process
Item #2 is removed as it identifies setting 'performance goals' which have been discontinued.

5.3.2 Effects from Performance Evaluation Rating
Previously the handbook identified a 'probationary period of performance review' may occur if an employee receives a rating below 'meets expectations.' Further information is now included that employee may be subject to a 'Performance Improvement Plan (PIP)' if they do not 'meet expectations' for an evaluation period. The thought is to implement performance improvement measures more effectively to allow for the possibility of a better rating for the next evaluation period.

In addition, you may notice other redlined areas that were not included in the sections above. The changes to these sections of the handbook are not substantive—they include better identification of City personnel in which to address items; superfluous description; or small grammatical errors identified.

EMPLOYEE HANDBOOK

CITY OF SEWARD

P.O. Box 38, 537 Main Street, Seward, Nebraska 68434. Phone: 402-643-2928. Fax: 402-643-6491. www.CityofSewardNE.gov

ADOPTED BY CITY COUNCIL
AUGUST 15, 2023

Last Update: DECEMBER 3, 2024

Our City promotes genuine community spirit by providing friendly quality services to people who live, work, and play in Seward.

TABLE OF CONTENTS (click below to link to section)

Section 1: Method of Meeting Staffing Needs
1.1 Classification of Employees 2
1.2 Procedure for Staffing City Departments 2
1.3 Conditional Offer Phase of Hiring Process 5
1.4 Reinstatement of Previous Employees 5
1.5 Introductory/Evaluation Period 5
Section 2: Employee Responsibilities and Conduct
2.1 Standards for Appearance 7
2.2 Attendance 7
2.3 Complaint Policy 8
2.4 Personal Business 9
2.5 Cell Phone Usage 9
2.6 Outside Employment 9
2.7 Political Activity 9
2.8 Social Media Usage 9
2.9 Care and Use of City Property 10
2.9.3 Controlled Substances & Alcohol Testing Procedure 12
2.10 Safety 15
2.11 Personnel Records 16
2.12 Peddling, Solicitation, Etc. 17
2.13 Conflict of Interest 17
2.14 Gratuities 17
2.15 Sexual Harassment Policy 18
2.16 No Discrimination or Harassment Policy 19
2.17 Workplace Violence 20
Section 3: Compensation of Employees
3.1 Pay Plan Structure 21
3.2 Pay Plan Step Placement 21
3.2a Working Out of Classification 21
3.3 Pay Plan Maintenance 22
3.4 Annual Performance Pay 22
3.5 Longevity Pay 22
3.6 Recording of Work Hours 22
3.7 Pay Period Compensation 23
3.8 Other Instances of Employee Compensation 24
3.8.1 Compensatory Time 24
3.8.2 On Call Time Situations 25
3.8.3 Call Back Time 26
3.9 Instances of Employee Reimbursement 26
Section 4: Employee Benefits
4.1 Holiday/Annual Personal Leave 28
4.2 Vacation Leave 28
4.3 Sick Leave – Including Leave for Injury 30
4.3.1a Parental Leave 31
4.4 Other Granted Paid Leave 33
4.4.1 Admin Leave 34
4.4.2 Funeral Leave 35
4.5 Instances of Approved Unpaid Leave 36
4.5.2 Family and Medical Leave (FMLA) 36
4.6 Health/Retirement Benefits 38
Section 5: Employee Development
5.1 Employee Orientation 39
5.2 Employee Development 39
5.2.1 Conferences and Education 39
5.3 Employee Evaluations 41
5.4 Employee Awards Program 43
Section 6: Employee Discipline and Separation from Employ
6.1 Corrective and Disciplinary Actions 44
6.2 Separation from Employment 46
Section 7: Employee Appeals
7.1 Procedure 49
Attachment A: **Definitions**
Attachment B: **Organizational Chart**
Attachment C: **Updates to Handbook Tracking**

INTRODUCTION TO EMPLOYEE HANDBOOK

The Mayor and City Council (Council) of the City of Seward, Nebraska (City) shall be the ultimate policy-making authority for the City in all matters pertaining to personnel administration. These policies, practices, or procedures included herein shall become effective when adopted by the Council. Upon adoption, the employee handbook shall supersede all previous or conflicting personnel policies, rules, regulations, and procedures adopted by the Council. The handbook shall apply to all departments, divisions and employees of the City except in cases of conflict with applicable City ordinances, state or federal laws or regulations or with the rules of the City of Seward Civil Service Commission as statutorily applicable.

Copies of the handbook shall be issued to all employees as part of new hire orientation. A current copy will be on file in the Human Resource Director's office and will be made available on the City website. It is the duty of each employee to read, understand, and comply with all provisions of the Handbook. It is your obligation to treat all citizens fairly, ethically, and with special privileges to none.

The purpose of this handbook is to serve as a written statement of the basic personnel policies, practices, and procedures of the City, which affect employment matters. This Handbook is not an exhaustive list of every workplace policy, practice, or procedure, but rather a guide to employees on commonly raised questions. Although the City has attempted to cover matters of general applicability to employees, no employee handbook can anticipate every circumstance or question about policy. The City, with approval of Council, reserves the right to revise, supplement or rescind any policies or portion of this Handbook as it deems appropriate, at any time, in its sole and absolute discretion, and to interpret these policies and procedures in its sole and absolute discretion. Employees will, of course, be notified of such changes to the Handbook as they occur.

The contents of this handbook are presented as a matter of information only and do not constitute an expressed or implied contract of employment between employee and the City. Nothing in this handbook is intended to nor should be construed to create a contract or guarantee of employment. Permanent employment or employment for a specific term is neither guaranteed nor promised to any employee of the City.

CITY'S COMMITMENT TO EEO, AA, AND ADA

The City affirms its commitment to equal employment opportunity (EEO) by providing a work environment that does not discriminate in employment opportunities or practices on the basis of race, color, religion, sex (including pregnancy, sexual orientation or gender identity), national origin, age, disability, marital status, military status, genetic information or any other prohibited basis of discrimination protected by law, will not be tolerated. The City also affirms its commitment to affirmative action (AA) to base all employment decisions only on valid job requirements. These policies shall apply to all aspects of employment actions, including recruitment, selection, job assignment, promotion, transfer, evaluation, discipline, termination, compensation, benefits, and selection for training, at all levels of employment.

The City abides by the requirements of the Americans with Disabilities Act (ADA), the ADA Amendment Act, and state laws governing employment of individuals with disabilities. Qualified individuals with disabilities may be entitled to an accommodation in the application process and/or in the workplace. Any qualified individual with a disability who requires reasonable accommodation in the employment process and/or in the workplace shall notify the City Administrator. The City will reasonably accommodate qualified individuals with a disability so that they can perform the essential functions of a job unless doing so causes a direct threat to these individuals or others in the workplace and the threat cannot be eliminated by reasonable accommodation or if the accommodation creates an undue hardship to the City.

SECTION 1: METHOD OF MEETING STAFFING NEEDS

1.1 Classification of Employees

For purposes of salary administration, overtime, and benefits, the City of Seward classifies its employees as follows:

A. ***Introductory Employee***. An introductory employee is classified as an employee that has not completed their introductory evaluation period as specified in **Section 1.5**. Introductory employees are not yet eligible for retirement benefits but are eligible immediately for medical insurance and leave benefits if they are a full-time employee. An employee in this classification will be subject to establishment of performance evaluation goals each April 1st and October 1st.

B. ***Regular Full-Time Employee***. An employee who has completed the introductory period and is expected to work 40 hours per week. The employee may be considered exempt (salaried) or non-exempt (hourly), depending on how their classified position is indicated in the job description. This classification of employees is eligible for City benefits—leave, retirement, medical—as identified in Section 4. An employee in this classification will be subject to establishment of performance evaluation goals each April 1st and October 1st.

C. ***Regular Part-Time Employee***. An employee who has completed the introductory period and is expected to work between 20-29 hours per week on average. The employee will be classified as non-exempt (hourly) and will be eligible for leave benefits only as identified in Section 4. An employee in this classification will be subject to establishment of performance evaluation goals each April 1st and October 1st.

D. ***Part-Time Employee***. An employee who will not complete an introductory period and is expected to work less than 20 hours per week on average. The employee will be classified as non-exempt (hourly) and will be eligible for leave benefits only as identified in Section 4. An employee in this classification will not be subject to the establishment of performance evaluation goals.

E. ***Seasonal Employee***. An employee who will not complete an introductory period and is expected to work up to 40 hours a week for a specified period of time. The employee will be classified as non-exempt (hourly) and will not be eligible for any benefits identified in Section 4. An employee in this classification will not be subject to the establishment of performance evaluation goals.

1.2 Procedure for Staffing City Departments

Department Heads shall notify the City Administrator and Human Resources Director as soon as they become aware of actual or impending vacancies within their Department. The hiring process may not be undertaken without the authorization of the City Administrator, who may specify the selection process or processes to be used. If a Department Head feels the need to add an additional employee or employees, a request should be submitted and approved by the City Administrator or by the City Council if it creates a new position. The request will be considered based on current and forecasted budget availability, assessment of current and forecasted duties of the department, and in consideration with any facility or equipment upgrades to be implemented. If a vacancy is actual or impending for the role of Department Head, the City Administrator will initiate the hiring process and the chosen candidate will be appointed by the City Council.

No applicant shall be prohibited from securing employment and promotional/transfer opportunity with the City of Seward on the basis of race, color, religion, sex (including pregnancy, sexual orientation or gender identity), national origin, age, disability, marital status, military status, genetic information, or any other characteristic protected by law. Any evidence of discrimination shall be brought to the attention of the affected employee's Department Head, Human Resources Director and City Administrator, in that successive order. The City will make reasonable accommodations for the known physical or mental

limitations of a qualified applicant or employee with a disability upon request unless the accommodation would cause an undue hardship on the operation of City business.

1.2.1 Selection of an Employee Currently in City Service

1.2.1a Promotion - A promotion is the assignment from a position in one class to a position in another class having a higher maximum salary. A Department Head may recommend an employee be promoted to a higher classification if the employee has demonstrated one or all of the following: efficiency in service, continued development, education, skill attainment or length of service in current position. A recommendation for promotion of a non-appointed employee shall be submitted to the City Administrator and must gain approval before initiated. City employees may apply and be considered for any vacant or newly created position but will be considered in the same manner as members of the public.

1.2.1b Transfer – A transfer is any assignment from position to another within the City, which may be considered a promotion if the employee qualifies. City employees shall have the privilege of requesting a transfer to another department at any time there exists a vacancy for which they qualify. Department Heads shall give deliberate and impartial consideration to such requests within their respective departments and should submit the request to the City Administrator for consideration and approval.

1.2.2 Competitive Selection

When a competitive selection process is to be used, the City Administrator, according to the best interest of the City, may designate the area of consideration to applications from the following:

1.2.2a The selection process may be limited to persons currently employed in the City service. If this method of filling a vacancy is chosen, advertisement of the position will be limited to internal methods only and the selection process may be governed by the promotion policy.

1.2.2b The selection process may be opened up to the general public in which case any qualified applicants are encouraged to file an application. If this method of filling a vacancy is chosen, advertisement for the position shall be coordinated through the Human Resources Director. Each vacancy announcement shall include, at a minimum the following information:

- Title and salary of the position;
- Summary of the qualifications for the position;
- Method of and deadline for filing applications; and
- A statement that the City is an equal opportunity employer

Applications shall be filed with the contact as specified in the applicable vacancy announcements. The City Administrator may authorize the acceptance of late applications if in the best interest of the City. The City shall provide reasonable assistance to persons requesting help in completing their applications. All information submitted by applicants shall be subject to verification. The City may cease accepting or processing applications at any time in accordance with operational requirements.

After the deadline for submittal, Department Heads and/or applicable Boards/Commissions, shall thoroughly screen the applications for completeness and should rank them on the basis of how well the applicant meets the hiring criteria indicated in the job advertisement. Criteria may include, but not be limited to the following: education, experience, skills/abilities, special training and certifications. Based on the rankings developed, the Department Head or Board/Commission in coordination with the Human Resources Director shall schedule and conduct interviews with the highest-ranking candidates. Depending on the number of applications for a vacancy, it will be the intention to interview at least three applicants formally. Applicants who are interviewed shall be asked the same questions and their answered recorded in writing—any written documents, notes or tapes utilized or

created in an interview will be forwarded to the Human Resources Director for retention. Applicants may be interviewed more than once if deemed necessary. Before the best candidate is identified, Department Heads or Board/Commission shall undertake the following tasks as possible: verification of previous employment, indication of performance in previous positions. Once the best candidate is identified, the Department Head or Board/Commission shall submit their recommendation to the City Administrator for consideration. If filling a vacancy for a non-appointed position, the City Administrator shall authorize the offer of the candidate deemed best qualified to fill the vacancy. If filling a vacancy for an appointed position, the City Administrator shall present a recommendation to the City Council for consideration and approval. The appointed individual will be offered the position only after City Council approval at a regular meeting.

Civil Service Rules & Regulations apply to appointing/hiring all sworn Police Department employees.

1.2.3 Non-Competitive Selection

When in the best interest of the City, a non-competitive selection process may be specified by the City Administrator. Vacancies may be non-competitively filled with qualified person by the following means:

a. Reinstatement of a former City employee;
b. Demotion for cause, as specified in 'Disciplinary Action';
c. Re-promotion of an employee previously demoted in lieu of reduction in force;
d. Lateral transfer; or
e. A selection process within the existing City service employees **(See 1.2.2a)**.

1.2.4 Disqualification of Applicants

An applicant may be disqualified from further consideration at any stage of the selection process for any of the following reasons:

a. Applicant is an illegal alien or an alien with a visa specifically precluding their working;
b. Applicant will not have attained their 18th birthday at the time of hire, except in cases where a lower minimum age has been established in the vacancy announcement;
c. Applicant is not medically qualified to perform the duties as ascertained in a manner prescribed by the City Administrator, except that disabled persons shall not be disqualified on medical grounds if their disability can reasonably be accommodated in the workplace;
d. Applicant is not of good moral character to the extent that their job performance would be impaired or that significant discredit or excessive risk would be brought upon the City by their employment;
e. Applicant is not able to meet the residential requirement of the position;
f. Employment of the applicant will violate the prohibition on the employment of relatives;
g. Employment of the applicant will create a conflict of interest situation;
h. Applicant lacks the education, experience, aptitude, or similar qualifications required for the position;
i. Applicant obtains a positive substance abuse test result during the conditional offer phase of hiring;
j. Applicant has a concerning background check result during the conditional offer phase of hiring, that would constitute an excessive risk to the City if they were employed;
k. Applicant has been or is about to be dismissed from employment or military service for reasons indicating a current unfitness for the position or constituting an excessive risk to the City if they are employed;

l. Applicant has made a false statement of material fact or has committed or attempted to commit a fraudulent, illegal, or unethical act or has attempted to exert political influence at any point in the application or selection process; or
m. Applicant will not possess any required license or certificate or will not be able to comply with any other requirement or condition of employment as specified.

1.3 Conditional Offer Phase of Hiring Process

1.3.1 Physical Fitness to Perform Job Duties

An applicant may be required to submit to a medical examination only after a conditional offer of employment and only if the examination is required of all applicants for the position. If the examination disqualifies an individual because of a disability, the examination standards shall be job-related and consistent with business necessity. An employee's medical records will be retained separate from personnel files and kept confidential in compliance with the regulations of the U.S. Equal Employment Opportunity Commission and the Nebraska Fair Employment Practice Act.

1.3.2 Drug and/or Background Testing

An applicant may be required to submit to a substance abuse test prior to employment and in adherence to **Section 2.9.3**. A background check of all prospective employees will be completed at the discretion of City Administration.

1.3.3 Employment of Relatives

No applicant for a regular full-time position or regular part-time position shall be considered for employment if the position for which they are applying would result in their working in the same department as a member of their immediate family. These same conditions will apply for an employee who is promoted or transferred to a position in any department which would result in working in the same department as a member of immediate family. These policies apply to all members of the immediate family of all personnel of the City. Seasonal and temporary full-time or part-time positions are exempt from this policy.

1.4 Reinstatement of Previous Employees

Employees who retired from active City employment, whether or not they are receiving pensions from funds provided by the City, shall not be eligible for active employment pay from any City department funds unless approved by the City Administrator.

An employee who is separated from service with the City and did so in good standing, either due to a resignation or the elimination of a position, may be re-employed provided that the person is qualified to perform the duties of the position. In appropriate circumstances, reinstatements following layoff shall be based on seniority, with the persons with longest total regular City service being re-employed first. The employee shall once again serve an evaluation period regardless of the employee's status prior to the separation.

An employee who is re-employed shall be given credit for one-half of the years of service from a prior employment, given the re-employment date is within three (3) years of a previous employment ending date. If such credit is equal to or greater than one-half year, such credited year(s) are rounded up to the next full year of service. If such credit is less than one-half year, such credited years are rounded down to the previous full year of service. The accrual rate for benefits will be determined using the same credit calculation. **EXAMPLES**: **#1.** An employee who worked five (5) years previously would receive credit for 2.5 years, therefore, their credited service would be rounded up to three (3) years of service. **#2.** If an employee worked 2.5 years, they would receive credit for 1.25 years thus would be rounded down to one (1) year of service.

1.5 Introductory/Evaluation Period—Applicable to new, re-instated or promoted employees

All regular full-time and regular part-time employees of the City of Seward shall serve in an introductory period for the first six (6) calendar months of employment. The purpose of this is to permit the Department Head to closely observe and evaluate the capabilities and

willingness of the new employee. During this time, the Department Head or Supervisor shall encourage and assist the new employee in making a successful adjustment to working for the City. Performance goals will be established for the next full period (six months) of performance goals creation, which begins in April and October annually.

For a promoted or re-instated employee (who previously completed an introductory period), an evaluation period of six (6) calendar months will be utilized for the Department Head to observe the capabilities of the employee in meeting the job requirements for the position. The Department Head and said employee shall establish performance goals at the beginning of a promotion or re-instatement period to allow for proper evaluation.

1.5.1 Failure of Introductory or Evaluation Period

At any time during the six-month introductory or evaluation period, an employee may be dismissed from the City service or may be reassigned by lateral transfer or demotion if their conduct, quality of work and/or fitness are insufficient to continue in the position. The Department Head, with the approval of the City Administrator, may provide an employee an additional period to demonstrate acceptable performance by extending the introductory or evaluation period no more than three months—failure to demonstrate acceptable performance after this extended evaluation period shall result in dismissal. The employee and Human Resources Director shall be notified if an introductory or evaluation period is extended. If an employee was promoted to the position and fails the six-month evaluation, they will be returned to their former position, if open, or may be reassigned to any other position deemed to which they qualify or may be terminated.

SECTION 2: EMPLOYEE RESPONSIBLITIES AND CONDUCT

2.1 Standards for Appearance:

As City representatives, employees should present a clean and professional appearance when in contact with other employees, elected officials, and members of the public. Employees are expected to use good judgement and common sense in choosing their workday attire. It is the intent of the City of Seward that any dress code standards created hereunder shall not discriminate against any employee based on race, color, religion, sex (including pregnancy, sexual orientation or gender identify), national origin, age, disability, marital status, military status, genetic information or any other protected class under the law. If the employee would request an accommodation based on any of the preceding factors, they should discuss the need with their immediate supervisor and/or the City Administrator. Instances of violation will be reported in the following order based on seriousness: immediate supervisor, Department Head, City Administrator or proper authorities.

2.1.1 General Workday Attire

Generally, all employees will dress in a manner that projects a professional, neat, business-appropriate appearance. With the prior approval of the City Administrator, Department Heads may have the ability to create different dress codes for their entire department, or within certain divisions, and even by certain work locations or sites. Several factors will be considered by the City Administrator in considering the request for an alternative dress code, including, but not limited to:

- The nature of the assigned work tasks and job assignments;
- whether such employee will be working primarily indoors or outdoors;
- federal, state and local safety regulations and requirements;
- interactions and meetings with the public, business agents, elected officials, and other officers.

Certain employees may be provided with uniforms and other City equipment, tools, and safety gear as needed to successfully complete job tasks.

2.1.2 Casual Workday Attire

Casual dress day may be observed by some departments on a designated day of every week, for a holiday or at any specified time by the City Administrator. An employee's participation in casual dress day is optional. Employees should not participate in any casual dress day when that employee has a scheduled meeting or presentation in which such casual dress wear would not be business or task-appropriate. Generally, on designated days these guidelines should be followed:

- No attire that is ripped, torn or has holes
- No attire that is unduly revealing and/or provocative
- No attire that is not appropriate for the task being performed for that day
- No attire that portrays a negative image or has inappropriate advertising or logos (eg. Drugs or alcohol related materials, obscene or inappropriate portrayals or pictures).

2.2 Attendance

Employees shall promptly be in attendance at their place of work in accordance with the policies regarding hours of work, holidays and leave. Work hours shall be established by the Department Head and be approved by the City Administrator beforehand. If a department's regular work hours are altered, employees will be notified a minimum of 14 calendar days before the incorporated change.

If an employee, for some unavoidable reason, cannot report for work, the employee shall notify their supervisor or Department Head in advance of the first normal duty hour; in addition, if an employee has to leave work during the day for some unavoidable reason, they shall notify their Department Head or supervisor before they leave. Failure on the part of an employee to comply with these policies shall be cause for disciplinary action.

2.2a Break Periods

A fifteen-minute break period will be allowed to employees of the City during each one-half day of work (typically 4 hours) for relaxation from the regular routine of duty. With the exception of the Police and Library personnel, an employee scheduled for an 8-hour shift will be allowed one meal period each workday. The meal period will be at least thirty (30) minutes but no longer than one (1) hour in length and will be scheduled to accommodate operating requirements of the Department. Employees will be relieved of all active responsibilities and restrictions during meal periods and will not be compensated for that time. Department Heads have the ability, on a case-by-case basis, to amend these requirements from time to time with approval of the City Administrator. Police and Library personnel are not relieved of all active responsibilities and restrictions and consequently may be compensated for mealtime.

The City shall provide reasonable break time for an employee to express breast milk for her nursing child for one year after the child's birth each time such employee has need to express the milk; and a place, other than a bathroom, that is shielded from view and free from intrusion from coworkers and the public, which may be used by the employee to express breast milk. If possible, such break time should be taken concurrently to the break time already provided to the employee. Department Heads have the ability, on a case-by-case basis, to amend these requirements from time to time with approval of the City Administrator.

2.3 Complaint Policy

In situations where an employee feels a work-related complaint in regard to policy and handbook implementation is in order **(See Section 7)**, the following steps should be taken:

2.3.1a If an employee believes that they have a legitimate work-related complaint, the employee is encouraged to first attempt to resolve the issue(s) with their Department Head. The complaint shall be presented in writing, on forms available at City Hall to their Department Head within five (5) business days from time of incident. The complaint shall clearly state the basis for the complaint and the relief requested. The Department Head will review the complaint and respond to the employee in writing within five (5) business days of receipt.

2.3.1b An employee remaining dissatisfied after receiving response from the Department Head may then submit the complaint to the City Administrator within five (5) business days after receiving response. The City Administrator will then review and respond within five (5) business days of receiving the complaint. Meetings may be held with employee, the Human Resources Department, and any other employee to discuss the complaint and remedy.

2.3.2a If a Department Head believes that they have a legitimate work-related complaint, the Department Head is encouraged to first attempt to resolve the issue(s) with the City Administrator. The complaint shall be presented in writing, on forms available at City Hall to the City Administrator within five (5) business days from time of incident. The complaint shall clearly state the basis for the complaint and the relief requested. The City Administrator will review the complaint and respond to the Department Head in writing within five (5) business days of receipt.

2.3.2b A Department Head remaining dissatisfied after receiving response from the City Administrator may then submit the complaint to the Mayor within five (5) business days from that date. The Mayor will investigate utilizing any or all of the following tools – written summary of the complaint, a review of the City Administrator's response, and/or consultation with the City Labor Attorney - and respond within ten (10) business days of receiving the complaint. Meetings may be held with employee, City Administration, and the Human Resources Department to discuss the complaint and remedy. After the investigation is completed, the Mayor

or City Attorney will advise the employee in writing of the results of their investigation and decision. The decision on the complaint shall be final and binding.

Time limits will strictly be enforced. Late submission of a complaint at any stage of the procedure shall bar its consideration unless there are extenuating circumstances. Similarly, if a Department Head or the City Administrator should fail to provide a written response within five (5) business days of receipt of complaint, the employee shall be allowed to advance their request to the next higher authority.

2.4 Personal Business

While on duty, personal phone calls (both incoming and outgoing), appointments and visitors should be conducted at break times or avoided unless absolutely necessary.

2.5 Cell Phone Usage

While at work, employees are expected to exercise the same discretion in using personal cell phones and electronic devices as is expected for the use of city phones. Excessive texting and personal calls during the workday, regardless of the phone or device used, can interfere with employee and department productivity and can be distracting to others. Employees are encouraged to text and make any other personal calls on non-work time where possible and to ensure that friends and family members are aware this policy.

Where workload needs demand immediate access to an employee, the City may issue a cell phone or other electronic device for work related communications, or a fee arrangement may be made to have the employee carry their own cell phone on an agreed upon schedule. As requested, the employee may be asked to produce this cell phone or electronic device for immediate return or inspection.

All employees are expected to follow applicable state or federal laws or regulations regarding the use of cell phones or other electronic devices. Employees whose jobs responsibilities include regular or occasional driving as a part of the workday shall refrain from texting or using the keypad while driving. Safety must come before all other concerns. Bring the vehicle to a safe stop before texting or using the keypad of the cell phone or electronic device.

Where possible, hands-free equipment will be provided with city issued phones and other electronic devices to facilitate the provisions of usage.

2.6 Outside Employment

Employees of the City of Seward may take occasional or part-time jobs if there is no conflict with normal working hours; the employee's efficiency in his work is not hampered; or conflict with the interests of the City do not arise. The employee shall complete an "*Outside Employment Form*" and advise their Department Head of the nature of the outside employment, hours involved, and any other appropriate information prior to acceptance of the outside employment. The Department Head shall then recommend to the City Administrator or appropriate authority whether the outside employment should be approved. Outside employment by City employees shall not be authorized unless first approved by the City Administrator or appropriate authority. In any situation wherein extra duty will be necessary in an employee's normal City work, such extra duty shall be in preference to his outside employment.

2.7 Political Activity

No employee shall be prohibited from participating in political activities except during work hours or when otherwise engaged in the performance of his or her official duties. No employee shall engage in any political activity while wearing a City uniform or wearing clothing denoting themself as a City of Seward employee

2.8 Social Media Usage

Employees shall refrain from using social media while on work time, unless it is work-related as authorized by the Department Head or consistent with the Cell Phone, Computer and Internet Services policy. Employees shall not use the City of Seward's email addresses to register on social networks, blogs or other online tools utilized for personal use.

2.8.1. General Social Media Use

The City of Seward takes no position on an employee's decision to start or maintain a blog or to participate in other social networking activities. However, it is the right and duty of the City to protect itself from unauthorized disclosure of confidential information and information expressly exempted from Nebraska's public records laws. Unless specifically instructed, employees are not authorized and therefore are restricted from speaking on behalf of the City. Employees may not publicly discuss confidential information or information expressly exempted from Nebraska's public records laws outside of City-authorized communications. Employees are expected to protect privileged data. For example, employees, vendors, or clients are prohibited from disclosing personal employee and non-employee information and any other proprietary and nonpublic information to which employees have access. Such information includes but is not limited to citizen financial information, legal process information, and personnel issues.

Employees are cautioned that they should have no expectation of privacy while using the internet. Postings can be reviewed by anyone, including City staff. The City reserves the right to monitor comments or discussions about the City, its employees, vendors, and contractors posted on the internet by anyone, including employees and non-employees. The City may use blog-search tools and software to monitor forums such as blogs and other types of personal journals, diaries, personal and business discussion forum, and social networking sites.

Employees are cautioned that they should have no expectation of privacy while using City equipment or facilities for any digital purpose. The City reserves the right to use content management tools to monitor, review or block content on city blogs that violate City blogging rules and guidelines.

2.8.2. Authorized Social Media Use on Behalf of the City

Only authorized employees can prepare and modify content for the City of Seward website and/or the social networking entries located on the web. Content must be relevant, add value and meet at least one of the specific goals or purposes developed by the City. If uncertain about any information, material, or conversation, discuss the content with the respective Department Head and/or City Administration. Access to City-owned social media sites will be discontinued upon resignation or termination of an employee who posts on behalf of the City.

Any copyrighted information where written reprint information has not been obtained in advance cannot be posted by an authorized employee.

2.9 Care and Use of City Property

Employees shall be responsible for the proper care and use of all City property entrusted or available to them. Employees damaging or losing City property through negligence or abuse shall be subject to disciplinary action and may be required to reimburse the City for such damage or loss. City equipment, keys, materials, and supplies shall not be used for private purposes and shall not be removed from authorized locations without proper supervisory approval. Employees leaving the City service shall return any tools, uniforms, or other City property issued to them before receiving their final pay.

At no time will any employee or member of the public be allowed to use/borrow City equipment, or place or park their own personal vehicle in a City owned garage, shop or building. (This includes parking on city premises to change oil, wash vehicles, etc.). City employees shall only be entitled to utilize and borrow City-owned equipment and facilities as per the policies of general use from the public.

2.9.1 Smoke Free Policy

Smoking by the public and City employees shall be prohibited in all municipal buildings and vehicles.

2.9.2 Guidelines for Computers & Internet Services

The City of Seward recognizes the need for computers and technology services to provide a productive professional work environment and will provide the necessary equipment to conduct such business. Computers and internet services are provided by the City of Seward to support open communications and exchange of information and the opportunity for collaborative government-related work. During business hours, computer use and internet communications to and from City employees and with outside entities, are presumed to be work-related. Although access to information and information technology is essential to the missions of government agencies and their users, use of computers and internet services is a revocable privilege. Abuse of the internet access provided by the City in violation of law or City policy will result in disciplinary action, up to and including termination of employment. Employees may be held personally liable for any violations of this policy. The following guidelines have been established to help ensure responsible and productive Internet usage.

All Internet data composed, transmitted, or received via the City's computer communications systems is subject to disclosure to law enforcement and other third parties. Employees should always ensure that the information contained in Internet e-mail messages and other transmissions is accurate, appropriate, ethical, and lawful.

City computers and data stored in them are the property of the City and may be accessed at any time by authorized City officials. The equipment, services, and technology provided to access the internet offered by the City remain at all times property of the City. As such, the City reserves the right to monitor internet traffic, and retrieve and read any data composed, sent, or received through their online connections and stored in their computer systems. Employees should not expect privacy in the use of City computers.

Data that is composed, transmitted, accessed, or willingly received via the Internet must not contain content that could be considered discriminatory, offensive, obscene, threatening, harassing, intimidating or disruptive to any employee or other person, except in the cases necessary for the performance of a specific job-related duty. Examples of unacceptable content may include, but are not limited to sexual comments or images, racial slurs, gender-specific comments or any other comments or images that could reasonably offend someone on the basis of race, color, age, sex/gender, religious or political beliefs, military status, national origin, disability, sexual orientation, marital status, pregnancy, genetic information, gender identity or any other characteristic protected by law.

The unauthorized use, installation, copying or distribution of copyrighted, trademarked, or patented material on the Internet is expressly prohibited. As a general rule, if an employee did not create material, does not own the rights to it, or has not gotten authorization for its' use, it should not be put on the Internet. Employees are also responsible for ensuring that the person sending any material over the Internet has the appropriate distribution rights.

The Internet is full of useful programs that can be downloaded, but some of them may contain computer viruses that can damage computers. Any software obtained from outside City government should be virus checked prior to use. Internet users should take the necessary anti-virus precautions before downloading or copying any file from the Internet. All downloaded files are to be checked for viruses; all compressed files are to be checked before and after decompression.

The use of e-mail through the City's network is for business purposes. Minimal personal use of the electronic mail system and Internet is permitted; however, the personal use is limited to the user's own time and is not to interfere with the job responsibilities and must adhere to all rules referenced herein. Employees should not use any e-mail messaging account or service other than that provided by the City.

When an instance of non-compliance with these guidelines is discovered or suspected, management shall take action in accord with City personnel policies **(See Section 6)**. Suspension of service to users may occur when deemed necessary to maintain the operation and integrity of the City of Seward network. User accounts and password access may be withdrawn without notice if a user knowingly violates the acceptable use policy. Abuse of the Internet access provided by the City in violation of law or the City policies will result in disciplinary action, up to and including termination of employment. Employees may also be held personally liable for any violations of the policy.

The following behaviors are examples of previously stated or additional actions and activities that are prohibited and can result in disciplinary action:

a. Any purpose which violates a federal, state or local law;
b. Sending or posting discriminatory, harassing or threatening messages or images;
c. Using the organization's time and resources for personal gain or for fundraising or public relations activities not specifically related to City activities;
d. Stealing, using or disclosing someone else's code or password without authorization;
e. Copying, pirating, downloading or installing software and electronic files without permission;
f. Sending or posting confidential material, trade secrets or proprietary information without authorization;
g. Violating copyright law;
h. Failing to observe licensing agreements;
i. Engaging in unauthorized transactions that may incur a cost to the organization or initiate unwanted internet services and transmissions;
j. Sending or posting messages or materials that could damage the organization's image or reputation;
k. Participating in the viewing or exchanging of pornography or obscene materials;
l. Sending or posting messages that defame, harass or slander other individuals;
m. Attempting to break into the computer system of another organization or person except in the cases necessary for the performance of a specific job-related duty;
n. Refusing to cooperate with a security investigation;
o. Sending or posting chain letters, solicitations or advertisements not related to business purposes or activities;
p. Using the internet for political causes or activities, religious activities or any sort of gambling;
q. Jeopardizing the security of the organization's electronic communications system;
r. Passing off personal views as representing those of the City or other users;
s. Sending anonymous e-mail messages;
t. Accessing or distributing computer games that have no relation to City activities;
u. Other similar actions.

2.9.3 Controlled Substance and Alcohol Testing Procedure

A. General Procedure

While at work, each City employee has a responsibility to the public to deliver services in a safe, efficient, and conscientious manner. In order to perform a job in the safest manner possible, City employees must be able to work in a drug free environment and themselves be free from the effects of alcohol and other job impairing substances while on the job. Accordingly, while on the job or in a City vehicle, the use, sale, distribution, possession, or being under the influence of an intoxicating liquor, controlled substance, drug not medically authorized, or any other substance that impairs job performance or poses a hazard to the safety and welfare of the employee, the public, or other employees, is strictly prohibited and may result in suspension or termination. Furthermore, the City is obligated to

comply with the Department of Transportation (DOT) regulations relating to controlled substances and alcohol use. The City will ensure that the controlled substances and alcohol testing conducted conforms to DOT workplace testing requirements.

To that end, a medical examination for prospective employees for the City of Seward shall include a substance abuse screen. Substances of abuse to be tested for include, but shall not limited to, amphetamines, barbiturates, benzodiazepines, cocaine, methadone, opiates, phencyclidine (PCP), propoxyphene, and marijuana. A prospective employee is defined as any employee who might be considered for employment by the City whether they are permanent full-time, permanent part-time and any seasonal, part-time or summer employees that operate equipment or vehicles. Equipment includes but is not limited to lawnmowers, chainsaws, weed whips and other potentially hazardous equipment. Any offer of employment shall be contingent upon a negative substance abuse test result. Any preliminary employment arrangement shall be immediately terminated if the result is positive.

Additionally, employees can be asked to submit to a test if cause exists to indicate that their health or ability to perform work might be impaired. Factors that could establish cause include, but are not limited to:

1) Sudden changes in work performance;
2) Repeated failure to follow instructions or operating procedures;
3) Violation of City safety policies;
4) Involvement in an accident or near-accident;
5) Discovery or presence of illegal of suspicious substances or materials in an employee's possession or near the employee's workplace;
6) Odor of alcohol and/or residual odor peculiar to some clinical or controlled substances;
7) Unexplained and/or frequent absenteeism;
8) Personality changes or disorientation; and
9) Arrest or conviction for violation of a criminal drug statue.

Employees may be tested if they are involved in an on-the-job vehicle accident cited for a moving vehicle violation, personal injury, or property accident on the job. Employees are prohibited from using alcohol or controlled substances following such an incident until they have been tested. Any employee who is seriously injured and cannot provide a specimen at the time of the incident must provide the necessary authorization for obtaining hospital records and other documents that would indicate whether there was alcohol and/or controlled substances in the employee's system.

B. Procedures for Employees with Commercial Driver's License (CDL)

It is the policy of the City of Seward that its commercially-licensed drivers (CDL) be free from controlled substance use and alcohol misuse. This policy has been adopted as part of the City's required compliance with United States Department of Transportation (DOT) regulations 49 C.F.R. Part 382. Those portions of this policy regarding disciplinary action or related to compliance with Nebraska law are based upon independent authority and are not prescribed by the DOT regulations.

Consequently, the use of illegal drugs by drivers is prohibited and drivers shall not use alcohol to engage in "prohibited conduct" as defined herein. Prohibited conduct is defined as the performance of safety-sensitive functions if under the influence of or impaired by alcohol. In addition to this policy, employees and other persons may be subject to other City policies and governmental regulations relating to alcohol misuse and controlled substance use affecting work activities that are not governed by DOT regulations related to functions performed by commercially-licensed drivers. Any driver who engages in prohibited conduct resulting in positive test result is subject to disciplinary action up to and including

termination. Persons determined to have positive alcohol or drug test results will have a right to an impartial internal management review of those determinations when a review is requested. This review must be in accordance with the appeal process outlined in the City's Personnel Handbook with such modification as are necessary to accommodate alcohol and drug testing pursuant to the DOT regulations. Disciplinary action taken against an employee because of such positive alcohol or controlled substances test results is reviewable under the City's Grievance Policy.

1) *Types of Tests*: §382.301-382.311 The City has implemented six circumstances for controlled substances and alcohol tests pursuant to regulations promulgated by the U.S. Department of Transportation (DOT)

a. **§382.301 Pre-Employment Testing**—Prior to the first time a driver performs safety-sensitive functions for an employer, the driver shall undergo testing for controlled substances as a condition prior to being used, unless the employer uses the exception in paragraph (b) of this section. No employer shall allow a driver, who the employer intends to hire or use, to perform safety-sensitive functions unless the employer has received a controlled substances test result from the Medical Review Officer (MRO) or Consortium/Third-Party Administrators (C/TPA) indicating a verified negative test result for that driver.
b. **§382.303 Post-Accident Testing**—A driver involved in an accident must contact his or her supervisor as soon as possible following the accident. As soon as practicable following an occurrence involving a commercial motor vehicle operating on a public road in commerce, each employer shall test for alcohol for each of its surviving drivers: (1) who was performing safety-sensitive functions with respect to the vehicle, if the accident involved the loss of human life; or (2) who receives a citation within 8 hours of the occurrence under State or local law for a moving traffic violation arising from the accident, if the accident involved:
   (i) Bodily injury to any person who, as a result of the injury, immediately receives medical treatment away from the scene of the accident; or
   (ii) One or more motor vehicles incurring disabling damage as a result of the accident, requiring the motor vehicle to be transported away from the scene by a tow truck or other motor vehicle.
c. **§382.305 Random Testing**—The City conducts random alcohol and control substance testing for persons it assigns to operate Commercial Motor Vehicles (CMV). The City will administer the City's drug and alcohol testing program through a Third-Party Administrator (TPA), responsible for compliance with DOT regulations. Selections will be at random, the City will drug test, at a minimum, 25% of the average number of driver positions in each calendar year. The City will also select, at a minimum 10% of the average number of driver positions for random testing. Each employee who is notified of selection for random alcohol and/or controlled substances testing will proceed to the test site immediately.
d. **§382.307 Reasonable Suspicion Testing**—An employee shall be required to submit to an alcohol test when the employer has reasonable suspicion. The employer's determination that reasonable suspicion exists to require the driver to undergo an alcohol test must be based on specific, contemporaneous, articulable observations concerning the appearance, behavior, speech, or body odors of the driver.
e. **§382.309 Return-to-Duty Testing**—The City will conduct testing in accordance with 49 CFR part 40, subpart O.
f. **§382.311 Follow-up Testing**—The City will conduct testing in accordance with 49 CFR part 40, subpart O.

2) *Refusal to Test*: **§382.211** Refusal to submit to required alcohol or controlled substance tests described herein will be grounds for refusal to hire driver/applicants and to terminate employment of existing drivers.

C. Provision of Training and Information (§382.601, §382.603)
The City Administrator or their designated representative will develop specific training for drivers and their supervisors. The City shall ensure that all persons designated to supervise drivers receive at least 60 minutes of training on alcohol misuse and receive at least an additional 60 minutes of training on controlled substances use. The training will be used by the supervisors to determine whether reasonable suspicion exists to require a driver to undergo testing under §382.307-Reasonable Suspicion Testing. The training shall include the physical, behavioral, speech, and performance indicators of probable alcohol misuse and use of controlled substances.

The City shall provide educational materials to each driver prior to the start of alcohol and controlled substances testing that explain the requirements of the DOT drug and controlled substances testing regulations and the City's policies for compliance. DOT regulations require each driver to sign a statement certifying receipt of these materials.

D. Substance Abuse Professionals and the Return-to-Duty Process (§40.287)
Each employee (including an applicant or new employee) who violates a DOT drug and alcohol regulation, must be provided a listing of Substance Abuse Professionals (SAPs) readily available to the employee and acceptable to the employer, with names, addresses, and telephone numbers. If the driver desires to become re-qualified, the driver must be evaluated by a SAP and submit to any treatment prescribed by the SAP following evaluation and treatment, if any, in order to become re-qualified, the driver must submit to and successfully complete a return-to-duty drug and/or alcohol test.

Such driver is also subject to follow-up testing. Follow-up testing is separate from and in addition to the City's reasonable cause, post-accident, and random testing procedures. Follow-up testing will be on a random basis and be in accordance with the instructions of the Substance Abuse Professional. **§40.307** No fewer than six unannounced follow-up tests will be performed in the first 12 months of safety-sensitive duty following the employee's return. Follow-up testing may continue for a period of up to 60 months following the driver's return to duty. The City does not guarantee or promise a position to the driver should he or she regain qualified status.

2.9.4 Use of City-Owned Vehicles
Department Heads and other employees, as designated by the Department Head, shall be allowed to use City-owned vehicles during on-duty hours. In certain instances, the City Administrator may permit employees to take City-owned vehicles home for the evening or to overnight trainings, conferences, seminars. Such vehicles shall not be used for other than official City business. Non-City employees – consultants, contractors, and other government officials - will be allowed to ride in City-owned vehicles for City related business, meetings, or conferences with the approval of the City Administrator or Department Head. In addition, both City and non-City employees may participate in the Police Department ride along program with approval of the Chief of Police. Employees using City vehicles will be expected to keep them clean, to schedule regular service checks and shall abide by all federal, state and local traffic regulations.

2.10 Safety
Employees shall observe prudent safety precautions at all times. Department Heads shall train their personnel to work safely. Each employee shall know what to do in case of fire or

other disaster as well as the location and use of first aid supplies. Safety precautions include the observance of traffic regulations when driving or operating City vehicles and equipment.

1) Equipment
   A. *Safety Belts* - All employees shall wear safety belts (shoulder and/or lap), when driving, operating or riding in City vehicles and equipment.
   B. *Hard Hats* - All employees shall wear hard hats, as supplied by the City, whenever working in an environment where a blow to the head could occur. Specifically, City employees shall wear hard hats in the following activities:

      i) When cutting, trimming and/or loading trees, shrubs and overgrowth;
      ii) When working in or around an area involving concrete removal;
      iii) When working in or around an area where a backhoe or loader is to be used on the project;
      iv) When working in or around an area where others are working overhead. For example, when working in a trench or pit or when working in or around scaffolding or buildings under construction or repair;
      v) When working in a bucket truck or digger derrick and when working as a groundman for employee in a bucket truck;
      vi) When working with underground electrical work.

   C. *Worksite Access* – Persons, including contractors or consultants, authorized by a Department Head or worksite foreman shall observe all safety and hard hat requirements at all work and construction sites.

   D. *Safety Vests* –Reflective vests, as provided by the City, shall be worn by all City employees working on construction, repair or a maintenance project on a public street or similar work site.

2) Violations of Safety Rules
   Violations of safety rules as set forth herein, as well as violations of internal departmental safety rules or the employee safety manual, shall not be tolerated. Any employee found in violation of safety rules will result in disciplinary action, up to and including termination of employment.

   The City employee in charge at the site of any project shall be deemed responsible for all employees working at the site. Said employee shall be equally subject to disciplinary action if the employee has willingly allowed safety violations to exist.

3) Reporting of Accidents and Injuries
   Employees shall report all accidents and injuries to their Department Head as soon as possible after the incident. Injuries of a minor, first aid nature may be treated at the job site or department office. If the injury requires medical attention, the employee may consult his family doctor or the EMC OnCall Nurse line. Rescue Squad services shall be used to transport employees to a hospital if the accident or injury results in incapacitation of the employee. Employees who have an accident with a City-owned vehicle shall first notify a law enforcement agency and then the Department Head. This shall be done regardless of how minor the accident. Within twenty-four (24) hours of the incident, the affected employee and Department Head shall file an accident-injury report at City Hall for insurance and Safety Committee review purposes. In addition, the Department Head shall ensure that the City's insurance carrier is notified of the accident/injury if a claim may be filed. These same conditions apply when employees are operating privately owned vehicles while conducting City business.

2.11 Personnel Records

The Human Resource Director shall maintain records on each employee to include pertinent personal data such as name, address, telephone number, title of position held, the department to which assigned, current salary and changes in employment status. Additional

information deemed important shall also be included. such as reports of attendance, conformance to expected standards, and other reports of performance evaluation. Employee personnel files are the property of the City. Employees have the right to inspect their personnel file at any time during business hours in coordination with the Human Resource Director. All personnel file inspections will take place in city offices in the presence of a representative designated by the Human Resource Director. The employee cannot remove any personnel files from the City offices but can make handwritten notes to record information included in their personnel files. Copies of the documents can be provided to the employee within four business days after a request has been made. The City reserves the right to charge the employee a reasonable fee to cover the copying costs.

Employees shall report to the Human Resource Director any changes of name resulting from a change in marital status, and any change of dependents. Also, to be reported are any changes in address, telephone number or information which will impact the personnel record of the employee. This information is required for insurance and tax purposes.

2.12 Peddling, solicitation, etc.

In order to avoid disruption to City services and operation, the City has established the following criteria related to solicitations and distribution of literature on City property:

a. Non-employees may not solicit or distribute literature on City property at any time for any purpose;
b. Employees may not distribute literature during working time for any purpose; and
c. Employees may not distribute literature at any time in working areas.

Working time includes the working time of both the employee doing the soliciting and distributing and the employee to whom the soliciting or disrupting is being directed. Working time does not include break periods, meal periods, or any other specified periods during the workday when employees are properly not engaged in performing their work tasks.

2.13 Conflict of Interest

No employee shall engage in any activity or enterprise which conflicts with their duties as a City employee or with the duties, functions, and responsibilities of the department in which they are employed. The following activities shall be considered a conflict of interest with City employment:

1) Any employment, activity or enterprise which involves the use for private gain of the City's time, facilities, equipment or supplies, or the badge, uniform, prestige or influence of a City office or employment.
2) Involves the receipt or acceptance by the employee of any money or other consideration from anyone other than the City for performance of an act in which the employee would be required or expected to render in the regular course of City employment or as part of their duties as a City employee.
3) Involves the performance of an act in other than their capacity as a City employee which may later be subject, directly or indirectly, to the control, inspection, review, audit or enforcement by such employee or the department by which they are employed.
4) Involves so much of the employee's time that it impairs their attendance or efficiency in the performance of their duties as a City employee.

2.14 Gratuities

No employee of the City of Seward shall accept any fee, reward, gift or gratuity that has any connection with said employee's municipal employment or from the performance of an employee's official duties. This acceptance limitation of any gift or gratuity shall not apply in those instances where a departmental gift or gratuity of nominal value is given by some individual or organization. The policy is intended, however, to discourage all gifts and gratuities which may be offered any employee or group of employees. Each employee should decline acceptance of such gifts or gratuities in the most courteous manner possible.

2.15 Sexual Harassment Policy

The City of Seward expressly prohibits its officials or employees from engaging in any form of unlawful harassment or discrimination as well as any behavior that would be inconsistent with the spirit and intent of this policy. Harassment or discrimination of any employee is a serious violation of City policy and will not be tolerated. This policy sets forth procedures by which allegations of sexual harassment may be filed, promptly addressed (and investigated if necessary), and appropriate action taken if warranted.

The City of Seward prohibits unlawful sexual harassment. Sexual harassment is unlawful when it: (1) is based on the individual's sex; (2) is unwelcome; (3) is severe or pervasive in nature; and (4) is made a condition of employment, unreasonably interferes with an individual's work performance, or has the purpose or effect of creating an intimidating, hostile or offensive work environment.

It is not possible to define every action or word that could be interpreted as sexual harassment. Sexual harassment may encompass a wide range of verbal, physical and/or visual behaviors. Each situation depends on a number of factors. In some cases, one incident will be sufficient to constitute harassment. In other cases, a pattern or series of incidents may be necessary. In addition, even if the behavior in question may not constitute unlawful sexual harassment, it may still be inappropriate in our workplace and subject to disciplinary action.

Examples of behaviors that might constitute sexual harassment (depending on the circumstances) and are the types of behaviors in which an employee should not engage include, but are not limited to:

1) Unwelcome sexual advances;
2) Verbal harassment or abuse;
3) Subtle pressure or requests for sexual activity;
4) Unnecessary touching of an individual, e.g., patting, pinching, hugging, repeated brushing against another employee's body;
5) Requesting or demanding sexual favors accompanied by implied or overt threats concerning an individual's employment status;
6) Requesting or demanding sexual favors accompanied by implied or overt promise of preferential treatment with regard to an individual's employment status;
7) Sexually explicit language, gestures, pictures, jokes or objects; or
8) Distribution of representations or descriptions of actual or simulated sexual acts, representations or descriptions of excretory functions, masturbation, or lewd exhibition of the genitals in hard copy, email, cell phone cameras, IMS, texts or in any other manner.

In addition, this policy prohibits retaliation against any employee because he/she files a complaint under this policy, cooperates with any internal investigation, or otherwise pursues their legal rights.

Complaint Procedure: Any employee who feels in good faith that they have been subjected to sexual harassment has several ways to make their concerns known.

1) Aggrieved persons who feel comfortable doing so should directly inform the person engaging in sexual harassing conduct or communication that such conduct or communication is offensive and must stop.
2) If an aggrieved person does not wish to communicate directly with the person whose conduct or communication is offensive or if direct communication with the offending party has been unavailing, the aggrieved employee shall contact his or her supervisor or the offending party's supervisor.
3) Aggrieved employees alleging either sexual harassment by anyone with supervisory authority or the failure of a supervisor to take immediate action on the employee's complaint should communicate with the supervisor at the next level of command or file a grievance in accordance with the provisions of the appropriate grievance procedure.

Regardless of the means selected for resolving the problem, the City will take every reasonable measure to address (and investigate if necessary) the situation and take appropriate action if warranted. Employees filing a complaint will not be subjected to retaliation for bringing such matters to the City's attention in good faith. All concerns will be handled with the utmost confidence, to the extent reasonably possible and consistent with a fair resolution of the problem.

2.16 No Discrimination or Harassment Policy and Complaint Procedure

The City of Seward expressly prohibits its officials or employees from engaging in any form of unlawful harassment or discrimination as well as any behavior that would be inconsistent with the spirit and intent of this policy. Harassment or discrimination of any employee is a serious violation of City policy and will not be tolerated.

Harassment of City employees by anyone, whether management/supervisory personnel, co-workers, or others on the basis of race, color, religion, sex (including pregnancy, sexual orientation or gender identify--nonsexual in nature, sexual harassment is covered by a separate policy), national origin, age, disability, marital status, military status, genetic information or any other prohibited basis of discrimination protected by law, will not be tolerated. Such conduct will result in immediate disciplinary action, including possible termination of employment.

Harassment is unlawful when it: (1) is based on race, color, religion, sex (including pregnancy, sexual orientation or gender identity), national origin, age, disability, marital status, military status, genetic information or any other characteristic protected by law; (2) is unwelcome; (3) is severe or pervasive in nature; and (4) is made a condition of employment, unreasonably interferes with an individual's work performance, or has the purpose or effect of creating an intimidating, hostile or offensive work environment.

It is not possible to define every action or word that could be interpreted as harassment. Harassment may encompass a wide range of verbal, physical and/or visual behaviors. Each situation depends on a number of factors. In some cases, one incident will be sufficient to constitute harassment. In other cases, a pattern or series of incidents may be necessary. In addition, even if the behavior in question may not constitute unlawful harassment, it may still be inappropriate in our workplace and subject to disciplinary action.

1) Epithets, slurs, negative stereotyping, or threatening, intimidating or hostile acts, because of an individual's race, color, religion, sex (including pregnancy, sexual orientation or gender identity), national origin, age, disability, marital status, military status, genetic information or any other characteristic protected by law. This includes acts that purport to be "jokes" or "pranks" but that are hostile or demeaning with regard to any protected characteristic.
2) Written or graphic material that denigrates or show hostility or aversion toward an individual or group because of race, color, religion, sex (including pregnancy, sexual orientation or gender identity), national origin, age, disability, marital status, military status, genetic information or any other characteristic protected by law and that is placed on walls, bulletin boards, or elsewhere on the employer's premises, or circulated in the workplace.

It is the responsibility of management personnel to maintain a working environment free of harassment on any of these bases and to make known to employees the policy of the City on such harassment. In addition, management is expected to take immediate action to deal promptly with known situations involving such harassment.

In addition, this policy prohibits retaliation against any employee because they file a complaint under this policy, cooperates with any internal investigation, or otherwise pursues their legal rights.

It is the employee's responsibility to report all incidents or perceived incidents of such harassment, pursuant to the following complaint procedure:

Complaint Procedure: Any employee who feels he or she has been subjected to harassment has several ways to make his or her concerns known.

1) Aggrieved persons who feel comfortable doing so should directly inform the person engaging in harassing conduct or communication that such conduct or communication is offensive and must stop.
2) If an aggrieved person does not wish to communicate directly with the person whose conduct or communication with the offending party has been unavailing, the aggrieved employee shall contact his/her supervisor or the offending party's supervisor.
3) Aggrieved employees alleging either harassment by anyone with supervisory authority or the failure of a supervisor to take action on the employee's complaint should communicate with the supervisor at the next level of command or file a grievance in accordance with the provisions of the appropriate grievance procedure.

Regardless of the means selected for resolving the problem, the City will take every reasonable measure to address (and investigate if necessary) the situation and take appropriate action if warranted. Employees filing a complaint will not be subjected to retaliation for bringing such matters to the City's attention in good faith. All concerns will be handled with the utmost confidence, to the extent reasonably possible and consistent with a fair resolution of the problem.

2.17 Workplace Violence

The City takes the safety of its employees very seriously. As a result, the City will not tolerate any acts or threats of violence by any employee or former employee. The City prohibits any acts or threats of violence against its employees, customers, or visitors by any individual on the City's premises at any time or while such individual is engaged in business with or on behalf of the City, on or off the City's premises. The City considers violence to include such things as physically harming, shoving, pushing, harassing, intimidating, or coercing another person. In addition, threatening, discussion of, describing, or joking about violence is considered violence as well.

In keeping with the spirit and intent of this policy, and to ensure the City's objectives in this regard, the City is committed to the following:

1) Providing a safe and healthful work environment;
2) Taking prompt remedial action up to and including immediate termination against any employee who engages in any threatening behavior or acts of violence or who uses any obscene, abusive or threatening language or gestures;
3) Taking appropriate action when dealing with customers, former employees, or visitors to the City's facilities who engage in such behavior. Such action may include notifying police or other law enforcement personnel and prosecuting violators of this policy to the maximum extent of the law; and
4) Prohibiting employees from possessing or carrying any firearms or other weapons, while on the City's property or while performing work as a City employee. For purposes of this policy, weapons include guns, knives, explosives, and other potential weapons.

In furtherance of this policy, employees have a role in preventing violence as well. If an employee believes a co-worker, former employee, customer, or visitor may become violent or they know of a violation of this policy, the employee must immediately report this to their supervisors. This would include, for example, threats or acts of violence, aggressive behavior, offensive acts, threatening or offensive comments or remarks, and the like. Employee reports made pursuant to this policy will be held in confidence, to the maximum possible extent. The City prohibits any form of retaliation against any employee for making a report in good faith under this policy.

SECTION 3: COMPENSATION OF EMPLOYEES

3.1 Pay Plan Structure

Within the limitations of its financial position, it is the policy of the City of Seward to maintain a Pay Plan which promotes the recruitment and retention of competent employees, through fair and equitable wages. It is the City's policy to maintain a salary program which provides peak motivation to employees by paying salaries which reflect an individual's accomplishments, as long as they remain within the limits of the established ranges for each position.

Each position is established by Ordinance and is classified into a "Pay Range" according to the level of responsibilities assigned the position. For example, a director's position would be expected to have a higher level of responsibilities than a subordinate, thus the pay range will reflect this fact. Each pay range shall be defined by a minimum salary and a maximum salary with seven salary steps in between (nine total steps). Except as affected by Longevity Pay **(see Section 3.5)**, an employee's salary shall not be lower than or higher than the Pay Range for his position.

3.2 Pay Plan Step Placement

All new employees shall be assigned a 'step' within the pay plan structure. It is expected that a new employee will be paid at the minimum wage of the Pay Range (Step 1) for the position for which they were hired. The only exception to this rule would be a new employee who significantly exceeds the minimum requirement of the position, either in education or experience. This employee may, with the recommendation of the Department Head and approval by the City Administrator, receive a salary commensurate with their qualifications within the limits of the Pay Range. In the case of hiring a City Administrator, the terms of the employment contract shall dictate what step they begin with, as approved by the Mayor and City Council.

3.2a Working Out of Classification

When an exempt, salaried employee or employees is/are designated by the City Administrator to act in a higher job classification and performs (or will perform) said duties for more than 80 consecutive work hours, such employee(s) may be compensated at a rate capped at 20% above their current base pay step within their given pay range on a temporary basis. Such designation shall be in instances of absence of a higher classified employee due to prolonged illness, death, military leave, or due to a vacancy in the position. Such designation shall be delivered in writing by the City Administrator and be placed in the employee's permanent file. The City Administrator shall also provide notice of the termination of such designation in writing.

In instances of a prolonged vacancy (exceeding 80 hours) within a department, non-exempt hourly employees may be designated by a Department Head or the City Administrator to assume additional responsibilities for maintaining operations, including duties of a higher job classification. In these instances, additional compensation may be suggested at the discretion of the Department Head or the City Administrator on a temporary basis. Compensation shall be capped at a 10% raise per non-exempt employee that assumes said duties or could be a lesser amount based on the discretion of the Department Head or City Administrator. A designation of employees and percentage raise shall be delivered by the Department Head, if possible, to the City Administrator for consideration. Such designation shall only be used in instances of absence due to prolonged illness, death, military leave, or due to a vacancy in the position. If approved, such designation shall be delivered in writing by the City Administrator and be placed in the employee's permanent file. The City Administrator shall also provide notice of the termination of such designation in writing.

3.3 Pay Plan Maintenance

The City Administrator, with the assistance of the Human Resources Director, may periodically review the pay plan to ensure that that salary levels in the applicable labor markets are properly reflected. The City Administrator shall propose to the Mayor and City Council such pay adjustments as are necessary for the City to remain a competitive and equitable employer and to meet the requirements of the Nebraska Commission of Industrial Relations (NCIR) and State law. Comparability studies such as these may occur each fall and any salary adjustments shall be reflected in the first full pay period following October 1st if approved by the City Council for any or all employees.

The City shall complete a formal Comparability Study of wages and benefits at least once every five (5) years by a recognized expert in the field of job analysis, wage and fringe benefit surveying with familiarity in testifying such matters before the Nebraska Commission of Industrial Relations (NCIR).

3.4 Annual Performance Pay

Compensatory increases shall be awarded annually through a performance evaluation system **(See Section 5.3)** and increase in 'step' in the pay-plan structure. Any change in salary will be effective April 1st to employees whose work performance is considered satisfactory or above **(defined in Section 5.3.2)**. All new employees must have completed a six-month introductory evaluation period **(See Section 1.5)** and all employees who have changed positions or been promoted must hold their new position for a minimum of six (6) months with at least satisfactory performance to be eligible for such pay increases. No performance increase will be awarded to an employee who has been demoted, suspended from work that results in disciplinary action, or who has two written reprimands in a 12-month period.

Annual performance increases are determined based on the average score of an employee's previous two semi-annual performance reviews and implemented effective April 1st. Employee performance goal sheets are completed and reviewed with the employee semiannually (October 1st and April 1st). Under the City's performance review system, employees with at least satisfactory performance advance one step on their pay range. For employees at the top of their pay ranges, performance pay for at least satisfactory performance scores will be awarded in the form of a one-time lump sum payment each April (not added to base pay). This payment will be in the amount of 3% of an employee's annual salary—only regular full-time and regular part-time employees will be eligible for this payment. The lump sum payment will have to be re-earned each year. Employees whose lump sum payment would have been in excess of 3% on April 1, 2023, under the prior performance standard before the adoption of the June 21, 2022, amendment to this handbook, shall have their lump sum amount frozen, until their payment is equal to 3% of their current salary or upon termination of the employment relationship.

3.5 Longevity Pay

Each full-time employee, who has completed their introductory period, will, for each year of service to the City, receive three dollars and forty-seven cents ($3.47) per month if classified as exempt, or two cents ($0.02) an hour if classified as non-exempt. This pay will be in addition to the established base pay in their respective salary range. Longevity pay will be reflected in the first full pay period in October of each year for anniversaries met during the previous fiscal year (October 1st – September 30th).

3.6 Recording of Work Hours

To ensure that accurate records are kept of the hours actually worked (including overtime hours where applicable), all non-exempt employees are required to record their time daily on the payroll timesheet software provided by the City. Employees must record the time when they begin work and when they complete their day, as well as any time they go off the clock for lunch, personal appointments or errands, or for any other reason. Note: The system will round time worked to the nearest quarter hour (up or down) depending on the minute of

entry. The Finance Director will keep a record of accrued vacation and sick leave hours as well as compensatory time. Copies of these records will be kept on file at City Hall.

3.7 Pay Period Compensation

The standard pay cycle shall be bi-weekly. Payment will be made by direct deposit to the account identified from the employee. Funds will be available on the Friday following the preceding Friday's end of the pay cycle. The City is required by federal law to make certain deductions from employee wages, which include deductions for Social Security and Medicare taxes as well as federal, state, and any local withholding taxes. Additionally, all voluntary deductions authorized in writing will be made as directed by the employee. Voluntary deductions may include the employee's share of the insurance premium.

It is the City's policy to comply with the salary basis requirements of the Fair Labor Standards Act (FLSA). If an employee feels an error has been incurred on their paycheck, it should immediately be communicated to the Human Resource Director, who will then promptly investigate the matter. Any discrepancies proved to be true will be rectified during the following pay period.

3.7.1 Incomplete Pay Period

An employee who does not work their regular scheduled work week shall have a percentage of their regular pay deducted from their pay, unless such absence is authorized as leave as hereinafter provided for and is authorized by their Department Head or the appropriate authority. Deductions from pay are permissible for an 'exempt' employee when one or more of the following conditions are present:

- when an exempt employee is absent from work for one or more full days for personal reasons other than sickness or disability;
- for absences of one or more full days due to sickness or disability if the deduction is made in accordance with a bona fide plan, policy or practice of providing compensation for salary lost due to illness;
- to offset amounts employees receive as jury or witness fees, or for military pay;
- or for unpaid disciplinary suspensions of one or more full days imposed in accordance to workplace disciplinary infractions (see Section 6). Non-exempt employees may also fall under this condition.

3.7.2 Overtime Pay

Overtime (1.5 times the employee's hourly rate) shall be paid to those entitled regular, non-exempt, full-time employees working in excess of the maximum set for their work period. All overtime pay must be pre-approved and documented. Working unauthorized overtime is grounds for disciplinary action, up to and including termination. If an employee is called to return to work to respond to an emergency, they shall be paid the overtime rate no matter how many regular hours they worked that week (benefits will be deducted as if the employee worked a regular shift). An emergency shall include utility service disruptions, snow and ice removal and other situations that are similar in nature which occur outside of normal working hours.

Pool employees are not eligible for overtime pay. The Fair Labor Standards Act, which is the Federal labor law for the application of overtime, minimum wage and Equal Pay Act includes the definition for employees that may be exempted from overtime. Pursuant to the Fair Labor Standards Act (Section 13(a)(1), those classified as Administrative, Executive, Professional or Computer Professional will be exempt from overtime.

3.7.3 Payment of Wages in Advance or in Lieu of Vacation Leave

The City of Seward will not provide any advances on future wages, including accrued vacation leave. The City will also not pay an employee in lieu of vacation leave—the employee is encouraged to utilize the vacation leave which they have accrued.

3.7.4 Termination Pay

An employee who is dismissed, voluntarily resigns, or dies as a current employee shall receive a final payroll payment on the next regularly scheduled payday or within two weeks of the last regularly scheduled payday, whichever date is earlier. This final paycheck will include the payment of any accrued, non-sick leave hours at the rate upon which the employee was terminated. If the employee is separated from the payroll less than one week prior to the next regularly scheduled payday, the final payroll payment for the employee will be made within two weeks of the next regularly scheduled payday. Sick leave payout will be governed by **Section 4.3**.

3.8 Other Instances of Employee Compensation

Outside of regular hours and overtime, the following situations may necessitate compensation to an employee in the form of payment or leave accrued.

3.8.1 Compensatory Time

In an effort to ensure financial stewardship, the City will utilize compensatory time off in lieu of overtime pay. All compensatory time accrued and used must be approved by the Department Head for subordinates, City Administrator in the case of Department Head, or Mayor in the case of City Administrator.

Overtime hours, if converted to compensatory time, shall be accrued at a rate equal to the adjustment for pay if the overtime hours were paid out **(see Section 3.7.2)**. Compensatory time shall be capped at 60 hours. For employees serving in the national guard or as a reservist, compensatory time can be specifically designated as a supplement to fulfill training requirements at the discretion of the City. If approved, this leave will be in addition to the City's annual military leave **(See Section 4.4.1c)** and capped at 120 hours. This leave can **only** be used for military leave purposes and cannot be transferred to an additional compensatory leave balance. Request to use this form of compensatory time accrual must be approved by the City Administrator before use.

On-call hours, when an hourly employee is on standby, can be accrued as compensatory time. Should an hourly employee be called in, call-back time would be eligible for conversion to compensatory time, subject to a request submitted by the Department Head and approved by the City Administrator.

The Golf Shop Manager position is exempt from this regulation, due to the seasonal activities of the golf course. This position shall not accrue more than 480 hours compensatory time in any calendar year, which shall be used prior to April 1 of the following calendar year, unless the City Administrator authorizes an extension of this date.

The accrual of compensatory time by Police Officers, while attaining initial certification, may be exempt from this regulation with approval of the Chief of Police and City Administrator but cannot exceed 120 accrued hours. Accrued hours attained during this initial certification period shall be used down to 60 hours within 90 calendar days following training completion or will be paid out at the regular rate earned by the employee at the time the employee receives the payment.

Overtime earned when working for another department shall be paid out and charged to the department in which the work was performed. This time cannot be accrued as compensatory time.

The City shall have the option of buying back accrued compensatory time from employees on an annual basis at the City's discretion at the end of the fiscal year. An employee can request accrued compensatory time be paid out at any time during the year. If accrued compensatory time is bought back from the employee or paid out, the compensation shall be paid at the regular rate earned by the employee at the time the employee receives the payment. Upon termination of employment, an employee shall be

paid for the unused compensatory time at the regular rate earned by the employee at the time the employee receives the payment.

An employee shall be permitted to use compensatory time within a reasonable period if the use does not unduly disrupt the operations of the City.

Exempt employees shall be allowed time off for attendance at official evening meetings or events, weekend meetings or events, and for extra time spent in order to complete special projects, with approval of the City Administrator or appropriate authority, and as long as such time off does not interfere with completion of their duties. Any compensatory accruals will not be paid out upon termination of employment.

3.8.2 On-Call Time Situations **(UPDATED 12-3-24)**

a. *Regular On-Call:* Employees in the Electric, Water/Wastewater, Street, and Public Properties Departments are subject to regular "On-Call" duty. Regular on-call duty consists of a seven-day period, when the employee is responsible for any emergency call in the respective utility including any after hours, weekend, or holiday duty. Departments shall ensure on-call duty during holidays is handled by only one employee during a seven-day period. Compensation for 'on-call' status during the scheduled seven-day period shall consist of two (2) hours of paid leave, or four (4) hours of paid leave if it occurs during a holiday week, for the seven-day period. If an employee is on regular on-call duty, the two (2) or four (4) hours of paid leave will be taken off during the same pay period. If, in the opinion of the Department Head, the workload is such that the employee cannot take the paid leave, the employee will be paid at the regular hourly rate for the two (2) hours earned while "on-call"—such paid leave shall count towards overtime calculations or may be converted to compensatory time off.

b. *SCADA Monitoring:* Supervisory Control and Data Acquisition (SDADA) monitoring is expected for all employees in the Electric and Water/Wastewater Departments as scheduled by their respective department head. SCADA monitoring may be conducted in an active or passive manner. Active monitoring will include the expectation that the designated employee accesses the software at least one time daily, and often multiple times, outside of regular working hours. Passive monitoring will carry no expectation that the designated employee will actively monitor the software unless alarmed with an emergency—in this case the employee will be compensated as per the provisions of 3.8.3. For purposes of clarification, the on-call employee in the Water/Wastewater Department will be considered as an 'active' monitor of the system and shall be compensated with an additional two (2) hours of paid leave in addition to the provisions of Part A. If, in the opinion of the active monitor and confirmation by a supervisor, the status of the facilities requires active maintenance, then the employee shall be compensated as per the provisions of Section 3.8.3. The on-call employee for the Electric Department shall be considered a 'passive' monitor of the system, and thus will not be compensated further unless an emergency arises.

c. *Inclement Weather:* In times of expected inclement weather, identified employees have an expectation to report to respond to the situation. These employees shall be identified as 'on-call' with prior written notification of a possible event/emergency by the supervisor of the weather event. Once written notification has been given, identified employees shall be compensated with—one-half (1/2) an hour of paid leave, or one (1) hour of paid leave on the actual, not observed holiday--for each day they are placed in 'on-call' duty. Such compensation shall count towards overtime calculations or may be converted to compensatory time off. Employees must always be reachable by telephone, cell phone or other method as agreed to by the City. Regular 'on-call' employees shall not receive inclement weather compensation.

During on-call duty, an employee should abstain from consumption of alcohol. It shall be the responsibility of an employee to advise their supervisor if they have consumed alcohol or believes that they have a blood alcohol content of .04 or greater or have taken any other drug. With that information, the supervisor shall have the discretion of what duties that employee is to perform. If the employee has reported to the site, they may be required to submit to an alcohol or controlled substance test when the employer has reasonable suspicion to believe that they are in an intoxicated state. If a previously informed on-call employee reports in a state exceeding the legal limit, they will be subject to disciplinary action up to and including termination. They may also be subject to legal disciplinary action if they were in operation of a motor vehicle.

3.8.3 Call-Back Time

For all employees called in to work, who are eligible to receive overtime pay, compensation shall consist of a rate not less than one- and one-half times the employees' hourly rate (double time on the City's actual—not observed—holiday), for a minimum of two (2) hours, regardless of the time actually worked. Compensatory time may be eligible for employees called-back, subject to **Section 3.8.1**.

In the case of a call back to which the employee was informed of the likelihood beforehand, an employee should abstain from consumption of alcohol. In the case of an emergency call-back in which the employee was not notified beforehand, it shall be the responsibility of an employee to advise their supervisor if they have consumed alcohol or believes that they have a blood alcohol content of .04 or greater or have taken any other drug. With that information, the supervisor shall have the discretion of what duties that employee is to perform. If the employee has reported to the site, they may be required to submit to an alcohol or controlled substance test when the employer has reasonable suspicion to believe that they are in an intoxicated state. If an employee reports in a state exceeding the legal limit, they will be subject to disciplinary action up to and including termination. They may also be subject to legal disciplinary action if they were in operation of a motor vehicle.

3.9 Instances of Employee Reimbursement

An employee may be entitled to compensation due from the City in the subsequent instances if it is approved by a Department Head and/or City Administrator. Requests for reimbursement shall use the current form established by the Finance Department and should be submitted as soon as possible after the expense is incurred. **Reimbursement requests in excess of six (6) months may be denied at the discretion of the Department Head and/or City Administrator**.

3.9.1 Uniform/Apparel Replacement

All new full-time employees within the Electric, Public Properties, Street, and Water/Wastewater Departments will be issued an allotment of uniforms/apparel as determined by the Department Head. After initial issue, it will be the employee's obligation to properly maintain or replace uniforms/apparel as needed. Funds for maintenance and replacement of uniforms/apparel will be allotted annually for each qualifying employee—as determined independently by each Department Head and established by the annual budget. Any requests for items exceeding the annual allotment shall be incurred at the cost of the employee. If maintenance or replacement of a uniform/apparel is requested, the item shall first be inspected by the Department Head to ensure it is needed. At the discretion of the Department Head, the replacement /maintenance item shall either be ordered by the City or the employee may order and submit a request to the Department Head for reimbursement. No reimbursement will be made to any employee unless the receipt and item is presented to the Department Head for confirmation of receipt. Any City-reimbursed items should be returned to the City

promptly upon termination at the discretion of the Department Head and/or City Administrator.

3.9.2 Lodging, Meals and Incidentals

Subject to prior approval from their Department Head and/or the City Administrator **(See Section 5.2),** an employee may receive reimbursement for any lodging, meals & incidentals costs up to the current U.S. General Services Administration rates. Any expenditures in excess of the pre-approved rates, may be incurred at the employee's expense at the Department Head's discretion, unless the expenditure(s) were unavoidable given the situation. To be reimbursed for expenses while on travel status, the employee must have receipts to accompany the claim and the reimbursement must be approved by the Department Head and/or City Administrator.

Meals may be provided, or eligible for reimbursement, for employees who begin performing emergency service work four (4) hours prior to their normal workday; or for work that continues four (4) hours past their normal work day, as long as the expenditures adhere to the U.S. General Services Administration rates.

3.9.3 Mileage

Subject to prior approval from the Department Head and/or the City Administrator **(See Section 5.2)**, an employee may be reimbursed for mileage incurred in their personal vehicle at the prevailing rate established by the Internal Revenue Service (IRS). This rate includes all travel and storage expenses (parking fees) of the vehicle. Odometer readings and/or documentation will be necessary for mileage reimbursement. To be reimbursed for any expenses while on travel status, the employee must have receipts to accompany the claim and the reimbursement must be approved by the Department Head and/or City Administrator.

3.9.4 Tuition

Subject to prior approval from Department Head and the City Administrator **(See Section 5.2)**, an employee may be reimbursed up to 50% of all eligible costs—including tuition, books, and laboratory fees—for any courses deemed to enhance employee's skills and abilities in their current position. To be reimbursed for any expenses, the employee must provide proof of successful completion of the course and a billing statement. The reimbursement must be reviewed and approved by the Department Head and City Administrator.

3.9.5 Personal Cell Phone

Employees deemed to be subject to 'on-call' or 'call-back' requirements, may be eligible for quarterly reimbursement of cell phone expenditures subject to prior approval from their Department Head and City Administrator. The amount of monthly reimbursement shall be established by the City Administrator.

3.9.6 Permits and Licenses to Operate City Vehicles and Equipment

Subject to the requirements for the position and the necessary permits and licenses, employees may be eligible for full reimbursement of these costs. The permit/license as well as the reimbursement request shall be presented to the Department Head and/or City Administrator for review and approval. Depending on the cost and nature of the training(s), they may be subject to a signed agreement between the employee and the City. Such an agreement would stipulate terms for employee repayment for training(s) to the City should they leave City service prior to a given period of time.

3.9.7 Eyeglass Program

Subject to adherence to the program requirements, an employee may be eligible for reimbursement up to 50% of the purchase cost of protective eye wear.

3.9.8 Miscellaneous Supplies for Operations

In some instances, an employee may be instructed by a Department Head or the City Administrator to make purchases on behalf of the City for convenience purposes to necessitate service operation. Reimbursement requests will be submitted and approved by a Department Head and/or the City Administrator.

SECTION 4: EMPLOYEE BENEFITS

4.1 Holiday/Annual Personal Leave

City offices shall be closed on the following Holidays, though some employees may be subject to on-call **(See Section 3.8.2)** or call-back **(See Section 3.8.3)** provisions. Employees not subject to on-call or call-back provisions will have no expectation to perform job-related duties on an observed holiday. All employees will be paid their normal rate on the following holidays:

New Year's Day	Martin Luther King, Jr. Day
Memorial Day	Independence Day
Labor Day	Veteran's Day
Thanksgiving Day	Day after Thanksgiving
Christmas Day	
Annual Personal Leave – Thirty-two (32) hours for regular full-time employee Sixteen (16) hours for regular part-time employee	

The following provisions are attached to the management of observed holidays:

1. Calendar - If an observed holiday falls on a Saturday, when offices are normally closed, the holiday shall be observed on the preceding Friday. If an observed holiday falls on a Sunday, when offices are normally closed, the holiday shall be observed on the Monday following.
2. Police Officer compensation – All regular full-time Police Officers, reporting for duty on the observed holiday, will be compensated for holidays on the day of the actual holiday at the overtime rate of time and one-half (**See Section 3.7.2 'Overtime Pay'**). All non-reporting, regular full-time Police Officers, will observe the holiday in the same manner as all other City employees, with compensation for eight (8) hours at their normal rate.
3. Mayor's holiday declaration - At the Mayor's discretion, City offices may be declared as closed on other recognized holidays and, in those instances, all employees scheduled to work that day will be paid at their normal rate or at the police officer compensation rate as noted above.

4.1.1 Personal Leave Provisions

All regular full- and regular part-time employees (**See Section 1.1)**, including those in their introductory/evaluation period (**See Section 1.5**), shall be issued annual personal leave renewed each January 1st.

- Regular full-time employees will acquire thirty-two (32) hours or four (4) days
- Regular part-time employees will acquire sixteen (16) hours or two (2) days

Any Personal leave time not used by December 31st of each year will be carried over to the next year; however, time carried forward from the prior year will be deducted from the thirty-two (32) or sixteen (16) hours acquired on January 1 so that no employee will have more than their cap at any given time. Personal leave must be taken a minimum of fifteen (15) minutes at a time. New employees will be assigned personal leave on a pro-rated basis from their date of hire through December 31st, with a full complement of eligible hours to be assigned in the calendar year. Unused Personal leave—upon resignation, termination or employee death—will be issued in same manner as vacation payout (**See Section 4.2.3**).

4.2 Vacation Leave (effective 10/1/23)

Employees with the following classifications are considered eligible—introductory, regular full-time, and regular part-time—and will be issued annual leave based on their service time. Each eligible employee shall be entitled to vacation leave per basis of one (1) year successive periods of continuous employment, including any credit received for prior service **(See Section 1.4)**. A year, for this purpose, shall begin from date of hire and shall constitute 365

days. Vacation leave for an eligible employee shall begin accruing on the day the employee enters service with the City; however, an employee may not use vacation leave until they have satisfactorily completed their introductory period **(See Section 1.5)**—at which they will be granted half their annual accrual.

The City Administrator—at their discretion—may determine a newly hired, eligible employee has relevant experience to be translated to 'years of service' in vacation accrual. In these instances, for every year of relevant experience determined by the City Administrator, it shall be counted as half a year of service for vacation leave accrual purposes only. For example, an eligible employee has 15 years of relevant experience outside of the City, they would be credited for 7.5 years of service and placed in appropriate vacation accrual category from their first day of employment with the City. This assigned service will not be utilized for recognizing service milestones as indicated in **Section 5.4**, the employee's first day with the City (in addition to any credited City service, **See Section 1.4**) will govern this program.

Annual Leave for Regular Full-Time Employees	
Years of Service	**Yearly Total**
During the first five years	80 hours annually
Beginning of sixth year to end of tenth year	120 hours annually
Beginning of eleventh year to end of fifteenth year	144 hours annually
Beginning of sixteenth year to end of twentieth year	160 hours annually
Beginning of twenty-first year to end of twenty-fifth year	184 hours annually
Beginning of twenty-sixth year onwards	192 hours annually

Note: Per the Fair Labor Standards Act (FLSA), no exempt employee's salary will be subject to reduction when the exempt employee is absent for less than a day and has exhausted their vacation, personal and comp time leave benefit.

Annual Leave for Regular Part-Time Employees (20+ hrs/week)	
Years of Service	**Yearly Total**
During the first five years	40 hours annually
Beginning of sixth year to end of tenth year	60 hours annually
Beginning of eleventh year to end of fifteenth year	72 hours annually
Beginning of sixteenth year to end of twentieth year	80 hours annually
Beginning of twenty-first year to end of twenty-fifth year	92 hours annually
Beginning of twenty-sixth year onwards	96 hours annually

4.2.1 Scheduling of Vacations

Employees shall submit vacation requests for approval as soon as possible in advance of the vacation leave date. Holidays occurring during scheduled vacation leave will be charged as holiday leave. In respect for the continuity of City operations, proposed Vacation leave dates shall be discussed and submitted via the payroll timesheet software to gain official approval from the department head, or the City Administrator (if the employee is a department head), or the Mayor (if the employee is the City Administrator). In rare instances or in extenuating circumstances, the City Administrator may have the discretion to waive the requirement of prior approval.

For those employees who have accumulated at least one hundred sixty (160) hours, no more than eighty (80) hours shall be taken at one time, unless special permission is granted by the Department Head, or the City Administrator (if the employee is a department head), or the Mayor (if the employee is the City Administrator). This requirement is to ensure the continuity of the operation of City services.

4.2.2 Vacation Leave Cap

Employees are encouraged to use all their earned vacation days each year. On their anniversary date, employees are not eligible to earn any additional vacation once they

have reached one and one-half times their annual vacation accrual limit, until they use all or a portion of their earned vacation. One and one-half times the annual vacation accrual limit is equivalent to one and one-half times the maximum number of vacation hours an employee is entitled to earn during a given vacation accrual year, based on the employee's length of service. For example, an employee with eleven (11) years of service may earn up to one hundred forty-four (144) hours of vacation during the vacation accrual year (the employee's annual vacation accrual limit). Thus, this employee will not accrue any additional vacation time until the earned vacation time is used and the number of hours in the employee's "vacation bank" is reduced to below two hundred sixteen (216) hours. Any vacation remaining at the end of the anniversary year, up to the cap, will be carried over.

4.2.3 Unused Vacation Leave at Termination of Employment

Employees will not be allowed to use vacation leave, unless approved by the City Administrator, in the final two weeks prior to termination of employment relationship to ensure a successful transition of work responsibilities. Employees who have unused earned vacation leave at the conclusion of their last day of employment—upon resignation, retirement, termination or death—shall be paid for such unused earned vacation leave in their final paycheck at their current rate (base pay + longevity). In the event of employee death, the deceased's personal representative, if such is determined, or the next of kin shall be paid any unused vacation leave and may be subject to a surety bond protecting the City from further claims by the estate.

4.3 Sick Leave—including Leave for Injury

All eligible employees—regular full-time employees and regular part-time employees—shall be provided with paid sick leave for use if incapacitated by illness or injury, if due to contagious disease, the employee's presence at work would jeopardize the health of others, and for medical, dental, optical, or other health care appointments. Those employees will be issued monthly sick leave in the following increments:

- Regular full-time employees will accumulate eight (8) hours monthly or ninety-six (96) hours annually. Max accumulation is nine hundred (900) hours.
- Regular part-time employees will accumulate four (4) hours monthly or forty-eight (48) hours annually. Max accumulation is four hundred fifty (450) hours.

Sick leave for an eligible employee shall begin accruing on the day the employee enters service with the City, with any sick leave for a fraction of a month to be issued on a pro-rated basis. An employee may use any accrued sick leave during their introductory period. Sick leave shall be subject to the following rules:

1. Sick leave may only be used for the situations identified in **Section 4.3.1**;
2. Sick leave shall not be granted in advance of accrual. Eligible employees may be authorized to use vacation leave, personal leave, compensatory time, or leave without pay **(See Section 4.5.1)** when sick leave is exhausted;
3. Notification of utilization of sick leave shall be made to the Department Head, City Administrator (in case of a Department Head), or Mayor (in case of the City Administrator) on as timely basis as is possible or by the time their normal workday begins. Failure to notify the City of an absence may be grounds for disciplinary action as identified in **Section 6**—this leave will be deducted from one of the following leave sources, in this order: compensatory time, personal leave, and vacation leave;
4. Approval in advance shall be obtained for non-emergency health care appointments;
5. The City may request and obtain medical certificates or otherwise verify the circumstances surrounding the utilization of sick leave, the abuse of which may be grounds for disciplinary action as identified in **Section 6**;
6. The minimum period of sick leave shall be no less than a 15-minute increment;
7. Sick leave may be used by an introductory employee during the introductory/evaluation period, but only if it has been accrued. If an introductory

employee has no accumulated sick leave and is absent due to illness or for any other reason for which sick leave is allowed, a deduction shall be made from their allocated personal leave. At the exhaustion of personal leave and at the discretion of the City Administrator, a regular employee may request and be granted an advance of sick leave—up to a maximum of 48 sick leave hours for full-time employees or up to a maximum of 24 sick leave hours for eligible part-time employees—or may request a voluntary leave of absence without pay;

8. If an eligible employee has exhausted accrued sick leave and is absent due to illness or for any other reason for which sick leave is allowed, leave will be deducted in the following order: compensatory time, personal leave, and vacation leave. If all sources of leaves are exhausted, an employee may request leave through the 'voluntary leave transfer program' **(See Section 4.3.3)**.

4.3.1 Eligible Uses of Sick Leave

Employees may use earned sick leave for personal needs or the needs of immediate family—spouse, domestic partner, children, grandchildren, grandparents, parents, and others bearing this same relationship to the employee's spouse, or any other legal dependent who resides with the employee. Reasons for sick leave include, but are not limited to, medical, dental, or optical examinations and care (including preventative care) for the employee or immediate family; treatment of a mental or physical illness, injury or health condition; care for an immediate family member with a mental or physical illness, injury or health condition; maternity or paternity leave; sickness that renders the employee incapable of performing his/her required job duties; or for exposure to contagious disease under circumstances in which the health of other employees or the public would be endangered by the employee's presence on duty. Depending on the seriousness of the injury or illness, the employee may be required to present a doctor's certificate indicating that they are capable of returning to work. Department Heads will have the authority to send employees home if they feel it is necessary for the well-being of all employees. Any employee who does not follow this rule shall be subject to disciplinary actions.

4.3.1a Parental Leave

The City provides maternity or paternity leave to all employees. Employees should notify their Department Head about their intention to take this leave with as much notice as is possible to ensure continuity of operations. The benefits are as follows:

- An employee is eligible to take up to 12 work weeks of unpaid, job-protected leave as per the Family and Medical Leave Act **(See Section 4.5.2)**.
- An employee may enroll in a short-term disability policy that is offered through the City's insurance provider and paid for at the employee's expense.
- An employee may use all previously earned leave, including sick, compensatory, personal, or vacation leave.
- An employee's health insurance will continue during the parental leave period; however, the employee shall be responsible to pay for their portion of the coverage. Arrangements should be made prior to the start of the leave period if any unpaid leave is utilized.

It is requested the employee maintains regular contact with their Department Head to discuss their expected return to service and their return-to-work plan.

4.3.2 Work-Related Injury or Illness Leave

Subject to the Statutes of Nebraska **(Section 48-101)**, all employees of the City who suffer on-the-job accidents or injuries are covered by the Worker's Compensation Act. When on-the-job accidents occur, they must immediately be reported to the Department Head and a call should be made to the EMC nurse, if practical. An Accident Report must be completed by the employee and turned in to HR within 24 hours of incident. Employees injured on City jobs who are eligible to receive worker's compensation

disability payments shall receive the worker's compensation check and the City will provide, in gross wages, the difference between the worker's compensation payment and the amount of the employee's earned wages during a given pay period. The difference in the worker's compensation check payment and the employee's regular base pay shall be prorated against the employee's accumulated sick, holiday, personal, and vacation leaves. Once these have been exhausted, the employee will only be eligible for the worker's compensation payment.

All employees must give their Department Head written notice (at least seven calendar days, if possible) of any non-emergency treatment or surgery for any alleged work-related injuries or illnesses. This notice will ensure that City operations are able to continue as normal.

4.3.3 Voluntary Leave Transfer Program

Under the Voluntary Leave Transfer Program, an employee eligible for leave, as defined by Employee Handbook **Section 1.1**, may voluntarily transfer leave directly to another eligible employee who has a personal or family medical emergency and who has exhausted their available paid leave (sick, compensatory, personal, vacation). There is no limit on the amount of donated annual leave a recipient may receive from donor(s). However, any unused donated leave must be returned to the leave donor(s) when the medical emergency ends and the employee returns to regular work status. The program shall be subject to the following provisions:

1. *Eligible Participants*: An eligible participant is anyone defined as a regular full-time or regular part-time employee as defined by **Section 1.1** of the Employee Handbook.
    a. *Application to Become a Leave Recipient:* An employee must complete a Leave Transfer Request Form to be eligible for leave donations. Forms are available in the Human Resources Office at City Hall. Certification regarding the medical emergency from one or more physicians must accompany the Leave Transfer Request Form. The City will contact all departments within ten (10) business days of a request for donated leave. Eligible employees wishing to donate leave to the recipient must complete a Voluntary Leave Transfer Form. Forms are available in the Human Resources Director's Office at City Hall.
2. *Eligible Events:* A medical emergency is a medical condition of either the employee or the employee's family member, defined under **Section 4.3.1**, that is likely to require the employee to be absent from duty for a prolonged period. A prolonged period is absence from duty without available paid leave for at least 24 work hours for a full-time employee or 12 hours for a part-time employee.
    a. *Use of Donated Leave:* A leave recipient may use donated leave only for purposes related to the medical emergency for which the leave recipient was approved. A leave recipient must use any accrued annual leave (sick, compensation, personal, vacation) before using transferred donated leave. Donated leave will be utilized by the recipient the order it was donated. Leave transferred to a leave recipient may NOT be:
        - transferred to another recipient from the original recipient; or
        - included in a benefits payout should the employee terminate employment (including death)
3. *Eligible Transferrable Paid Leave:* Available transferrable paid leave includes an employee's sick leave (only if donating employee has reached a threshold of 480 hours accrued), compensatory, personal, safety, and vacation leave balance up to the date of the transfer. Leave shall be deducted from the donor's current bank upon donation and shall be accounted for and maintained by the Human Resource and Finance Departments until used or returned to the donor.
    a. *Limitations on Leave Donations:* An employee may donate not more than one-half of the amount of annual sick or vacation leave they would accrue

during the leave year. Compensatory, personal and safety hours may be donated in their entirety.

4. *Termination of the Eligible Event:* An eligible event terminates when one or more of the following occurs:
    - The leave recipient's employment is terminated;
    - The leave recipient provides written notice (doctor's note to return to work) that the eligible event is over; or
    - the leave recipient returns to work at their regular status.
5. Restoration of Unused Donated Leave: Any unused transferred leave remaining to a leave recipient's credit on termination of the medical emergency must be restored to the leave accounts of the donors. Once transferred leave is restored to a leave donor's account, the leave is treated the same as other annual leave in the account and becomes subject to the annual leave cap limitations:
    - Restored unused sick leave causing the donor's balance to go over 900 hours will be lost.
    - Should the return of transferred leave cause a donor to go over the vacation cap amount, the employee will have 30 days to use the amount over the cap limit.

    Leave shall be restored back to donors in reverse order of how it was donated, this is to account for its use in the order it was donated in.

4.3.4 Unused Sick Leave at Termination of Employment

Unless an employee meets one of the conditions in the following sentence, all sick leave accumulated by an employee shall not be reimbursed upon termination of the employment relationship with the City. An employee who retires in good standing after reaching the age of 'full retirement' or 'early retirement' as defined by the Social Security Administration; or who resigns in good standing with twenty (20) years of continuous service to the City; or who dies while employed with the City, shall be paid fifty percent (50%) of their accumulated sick leave balance.

4.4 Other Granted Paid Leave:

4.4.1 Administrative Leave:

In limited instances, the City Administrator may grant subordinate employees paid administrative leave, which will not require a leave request. A few of the qualifying instances are described below:

4.4.1a. Court and/or Jury Duty:

To be granted administrative leave for this reason, an employee must present to the HR Director an original summons or court subpoena and at the conclusion of service, a certified statement of the Clerk of Court confirming the start and end date.

- An employee who is required to serve as a juror or as a witness in a federal, state, county, police, or municipal court or as a litigant in a case resulting directly from the discharge of the employee's duties shall be granted leave with pay to serve in that capacity.
- An employee involved in court as an expert witness (not related to their duties as an employee) or in a personal case, either as a plaintiff or as a defendant shall not be granted administrative leave with pay. Instead, the employee's absence shall be deducted from their earned compensatory, personal, vacation leave. If all sources of earned leave, an employee may request a voluntary leave of absence without pay as specified in **Section 4.5.1**.
- Pay received from the court for such duty shall be given to the City Treasurer. Expense reimbursement shall be kept by the employee.

4.4.1b. Due to Emergency Closure of City offices:

- *During regular City office hours* ***(UPDATED 12-3-24)****:* When an emergency condition necessitates the closing of a facility, the Mayor and/or City Administrator may make a determination as to whether a cancellation of work and facility closing is necessary. Facility closures may be site specific or City wide depending on the nature of the emergency. Employees may be assigned to other locations for work or be placed in a 'work from home' status. Depending on the nature of the emergency, employees may be required to work during the emergency condition at the direction of the Department Head or City Administrator. Employees will be required to provide their Department Head with a phone number and location where they can be contacted should the emergency condition end and work can be resumed. During the closure of City offices, reporting employees (employees using earned leave are excluded) may be placed on "leave-with-pay" status. Employees who report to work but leave prior to the time the facility is officially closed, who cannot be contacted or are unable to return to work should the facility reopen, will be paid only for actual hours worked. They will be required to either make up the time absent from work or charge such time absent from work to accrued vacation, personal, or compensatory time leave. If a non-exempt employee does not have accrued vacation, personal, or compensatory time leave and is not able to make up that time during the same pay period, their work absence will be treated as unpaid leave.

  In addition to their regular pay, employees who are required to work in the elements during an emergency closure (ex: snow removal, police, etc.) shall accrue one (1) compensatory hour for each hour worked during their regular shift. Hours worked subsequent to an employee's regular shift will be subject to normal overtime rules **(See Section 3.7.2)** or 'call back' **(See Section 3.8.3)**. Only regular full-time and regular part-time employees shall be placed in a "leave-with-pay" status. During an emergency closure, part-time employees and seasonal employees shall not report to duty and shall not be compensated in any way for time not actually worked.

- *Closure for more than one business day:* In the event an emergency causes a City facility to be closed for two (2) or more days, or in the event of unusual circumstances, pay allowance provisions for all employees shall be determined by the Mayor and/or City Administrator.

4.4.1c. Military Leave:

All employees who are members of the National Guard, Army Reserve, Naval Reserve, Marine Corps Reserve, Air Force Reserve, and Coast Guard Reserve, shall be entitled to a City-paid military leave of absence for not more than one hundred twenty (120) hours each calendar year. An employee shall be entitled to retain both their military pay and the City's military paid leave of absence. If an employee's military service extends past the City's allotted one-hundred twenty (120) hours for a calendar year, the employee may utilize any earned compensatory, personal, or vacation leave and/or will be allowed a leave of absence without pay for the duration of their service. If called to respond to a state of emergency declared by the Governor, an employee will not be eligible for a military leave with pay, but instead, they shall receive their normal compensation minus the state active-duty base pay they receive in active service of the state. When an employee is called into active duty for an extended period, the City shall follow the Uniformed Services Employment and Reemployment Act

(USERRA).

The City of Seward complies with the Family and Medical Leave Act (FMLA) as a covered employer and will grant eligible employees up to 26 workweeks of unpaid, job-protected leave in a 12-month period for military caregiver leave. To be eligible for leave under this policy, employees must meet all of the following requirements:

- Have worked for the City for a total of 12 months (can be non-consecutively); and
- Have worked for the City at least 1,250 hours over the twelve (12) months preceding the date the leave would commence. All periods of absence from work due to service in the uniformed services are counted towards this eligibility.

To qualify as FMLA leave under this policy, the leave must be for one or more of the following reasons.

- For a qualifying exigency arising out of the fact that a spouse, child, or parent is a military member on covered active duty or on call to covered active-duty status. Qualifying exigencies for which an employee may take FMLA leave include short notice deployment, making alternative childcare arrangements for a child of the deployed military member, care for the military member's parent, attending certain military ceremonies and briefings, counseling related to the deployment, military member's short-term R&R leave, post deployment activities, or making financial or legal arrangements to address the military member's absence.
- To care for a covered service member, either currently in Armed Forces or an honorably discharged veteran within past five (5) years—spouse, child, next of kin, or parent—with a serious injury or illness.

Section 4.5.2 provides more information.

4.4.1d Related to Work Operations:
An employee may be granted administrative leave with pay for the following circumstances:

- To compete for positions of employment within the City's hiring process;
- To present grievances or appeals to City officials; or
- In the event of the death of a current City employee, to allow for coworkers to attend the funeral.

4.4.2 Funeral Leave:

A. Due to Immediate Family Member Death: In the event of death of an employee's father, mother, spouse, child (included step or adopted), daughter-in-law, son-in-law, mother-in-law, father-in-law, sister, brother, sister-in-law, brother-in-law, grandparents, grandchildren, or legal dependent, the employee may be allowed leave with pay for reasonable and necessary absence for arrangement and attendance to said funeral. Employee should define their relationship and location of the service on their submitted request to ensure the proper leave is issued—if these details are excluded, the request for leave may be denied. Family members not defined in the preceding sentences will be eligible for leave clarified in Part B.

Leave with pay will be allowed up to the following maximums and will not be deducted from funeral leave as described in Subsection 4.4.2B: twenty-four (24) hours per person and per event for a regular full-time employee and twelve (12) hours for a regular part-time employee. If more than the maximum time is requested and approved, it will be deducted from an employee's earned compensatory, personal, vacation, or sick leave.

B. To Attend a Funeral, not eligible for 4.4.2A: For time of travel to attend a funeral

in Seward, leave with pay may be granted at a minimum of one (1) and a maximum of four (4) hours. For a funeral outside of Seward, a minimum of one (1) and a maximum of eight (8) hours leave with pay may be granted. The maximum leave with pay allotted to an employee per calendar year is twenty-four (24) hours for regular full-time employees and twelve (12) hours for regular part-time employees. If an employee has expended their allotment for the year, the employee may request use of leave to be deducted from earned compensatory, personal, or vacation leave.

4.5 Instances of Approved Unpaid Leave

The following instances will allow an employee to maintain employment with the City of Seward while on unpaid leave. Unpaid leave will only be allowed if previously approved by the City Administrator in writing.

4.5.1 Voluntary Leave of Absence Without Pay

In limited instances, and only when all sources of leave—compensatory, personal, vacation, or sick leave—or when an employee is not eligible for the Family and Medical Leave Act (FMLA), a request for a voluntary leave of absence without pay will be considered. All requests for unpaid leave must be made in writing and submitted to the Human Resources Director with as much advanced notice as is possible. The written request must describe the reason for the leave, the date on which leave would begin and the date on which the employee expects to return to active employment. Any employee who is granted such a leave shall be limited to a maximum annual leave—based on a floating 12-month calendar—in accordance with their length of service as follows:

Years of Employment	**Max Unpaid Leave allowed**
0 - 4.99	0 hours
5.0+	160 hours

Leave benefits--including sick, personal and vacation leave--issued to employees by the City shall be reduced proportionately during the leave of absence; however, the employee will still accrue service time in this employment status. While on unpaid leave, the employee must continue to pay their share of insurance premiums; therefore, arrangements will need to be made with City Administration for this payment. Failure to report at the expiration of the leave of absence shall be considered a resignation of position.

4.5.2 Family and Medical Leave (FMLA)

The City of Seward complies with the Family and Medical Leave Act (FMLA) as a covered employer and will grant eligible employees up to 12 workweeks of unpaid, job-protected leave in a 12-month period for specified family and medical reasons.

A. Eligibility

To be eligible for FMLA benefits, an employee must:

- Have worked for the City for a total of 12 months (can be non-consecutively); and
- Have worked for the City at least 1,250 hours over the twelve (12) months preceding the date the leave would commence. All periods of absence from work due to service in the uniformed services are counted towards this eligibility.

To qualify as FMLA leave under this policy, the leave must be for one or more of the following reasons.

- The birth of a child or for placement with the employee for adoption or foster care.
- To care for a spouse, child, or parent who has a serious health condition.
- For a serious health condition that makes the employee unable to perform the

essential functions of their job.

- For any qualifying exigency arising out of the fact that a spouse, child, or parent is a military member on covered active duty or on call to covered active-duty status.
- To care for a covered service member with a serious injury or illness.

B. Amount of Leave

An eligible employee can take up to 12 workweeks of FMLA leave during any 12-month period or up to 26 weeks for the FMLA military caregiver leave. The leave will roll backward to the date the leave was requested. Employees may request to take this time consecutively or intermittently—in all cases, the leave cannot exceed 12 workweeks or 26 workweeks for military caregiver leave. Eligible spouses who are both employed by the City may take only a combined total of 12 workweeks of leave for the birth of a child, for adoption or placement of a child in foster care, or to care for a parent (but not a parent 'in-law') who has a serious health condition—or 26 weeks to care for an injured or ill servicemember). Leave for birth and care, or placement for adoption or foster care, must conclude within 12 months of the birth or placement.

C. Intermittent Leave or a Reduced Work Schedule

Under some circumstances, employees may take FMLA leave intermittently–taking leave in separate blocks of time for a single qualifying reason/exigency, or on a reduced leave schedule–reducing the employee's usual weekly or daily work schedule. Any changes to an employee's normal schedule must first be approved by the Department Head and City Administrator in writing before incorporation. When leave is needed for planned medical treatment, the employee should make a reasonable effort to schedule treatment so as not to unduly disrupt the City's operation. If FMLA leave is for birth and care, or placement for adoption or foster care, use of intermittent leave is subject to the City's approval.

D. Employee Notice Requirement

All eligible employees requesting FMLA leave must provide verbal or written notice of the need for leave to the Human Resources Director. When the need for leave is foreseeable, employees are asked to provide 30-days advance notice to take FMLA leave. If leave is foreseeable less than 30 days in advance, the employee must provide notice as soon as practicable - generally, either the same or next business day. Employees should provide sufficient information for City Administration to reasonably determine whether the FMLA may apply to the leave request.

Within five (5) business days after the employee has provided this notice, the Human Resources Director will complete and provide the employee with a FMLA Designation Notice, Notice of Eligibility and Rights, and may request a medical certification or other supporting documentation as is requested. At this time, the Human Resources Director will indicate how much leave the request qualifies for under the FMLA.

E. Employee Status and Benefits During FMLA Leave

An eligible employee on this unpaid leave will still be considered a City employee and will still continue to accrue their service time. The City will continue an employee's health insurance coverage during the FMLA leave period at the same level and on the same terms as if the employee was continuously at work. While on unpaid leave, the employee must continue to pay their share of insurance premiums; therefore, arrangements will need to be made with City Administration for this payment. In some instances, the City may recover premiums it paid to maintain health coverage for an employee who fails to return to work from FMLA leave.

F. Employee Return to Work after FMLA Leave

The City requires employees returning from leave for their own serious health condition to submit a certification that they are able to resume work. If reasonable

safety concerns exist, the City may, under certain circumstances, require such a certification for employees returning from intermittent FMLA leave. Upon return from FMLA leave, an employee will be restored to their current position, or an equivalent job with equivalent pay, benefits, and other terms and conditions of employment. An employee's use of FMLA leave will not result in the loss of any employment benefit that the employee earned or was entitled to before using FMLA leave. An employee has no greater right to restoration or to other benefits and conditions of employment than if the employee had been continuously employed.

4.6 Health/Retirement Benefits

The City offers a total compensation plan consisting not only of hourly or salaried pay, but also of substantial employee benefits. The Human Resource Director shall make information available concerning current benefits. Some benefits may be provided only at an employee's expense or eligible to certain employee classifications. Participation in the insurance programs shall be voluntary. The current program will outline any waiting period or pre-existing condition stipulations. **Only regular full-time employees are eligible for the benefits contained in this section.**

4.6.1 Hospital and Medical Insurance

All regular full-time employees shall be offered an opportunity to enroll in health insurance on the first day of employ, which will then take effect in the subsequent month. Dependents of regular full-time employees shall be provided health insurance at the employee's request. The percentages that the City pays and the employee pays will be established during the budget process and employees will be notified of any changes on a yearly basis. Payroll deductions will be made for the employee portion of the premium.

4.6.2 Dental Insurance

The City shall incur the full cost to insure dental insurance for employees. Dependent dental insurance may be purchased through payroll deduction as specified by the employee's enrollment.

4.6.3 Vision Insurance

An employee shall incur full costs for coverage of themselves and their dependents for vision insurance. Enrollment for employee or dependent coverage will result in a payroll deduction.

4.6.4 Life Insurance

The City will offer to pay the costs to insure each eligible employee up to $25,000. An employee may choose to purchase further coverage for themselves or their family at an additional cost paid solely by the employee. Enrollment for additional coverage will result in a payroll deduction.

4.6.5 Retirement Systems

The City agrees to pay an adopted percentage. Employees will be advised of the percentage and are to have the same percentage deducted from their payroll to be paid into a retirement fund as per contract with the City's Retirement Plan Company. Overtime will not be included in figuring the percentage for regular full-time employees but will be included in figuring the percentage for Police Officers. Retirement for Police Officers will be governed by the City of Seward Police Pension Plan Document, which will be in accordance with Ordinance Number 913. Any full-time employee is allowed to make additional contributions to their own retirement plan or the City of Seward 457 Deferred Comp Plan, in accordance with the Retirement Plan provisions.

SECTION 5: EMPLOYEE DEVELOPMENT

5.1 Employee Orientation

Employees within the regular full-time or regular part-time classification will serve in an introductory period for the first six (6) calendar months of employment **(See Section 1.5)**. The purpose of this is to permit the department head to closely observe and evaluate the capabilities and willingness of the new employee. During this time, the City shall encourage and assist the new employee in making a successful adjustment to working for the City.

The Human Resource Director shall be responsible for any orientation related to any salary or wage information as well as the employee personnel handbook. Each department head shall be responsible for facilitating the adjustment of an employee to their work situation by:

1) Preparing their workspace to adequately allow for execution of duties.
2) Providing clear performance expectations and objectives so the new hire understands what is expected and their responsibilities.
3) Discussion of the performance evaluation system and how they will be measured after their introductory period.
4) Introduction to members of their department or any other individuals with whom they will be working with regularly.
5) Instruction and guidance in learning to perform their job function.
6) Frequent discussion regarding the progress in learning and performing the work.
7) Discussion of any goals, objectives, or certifications/licenses to achieve in their first performance evaluation period.

5.2 Employee Development

The City Administrator and Human Resource Director, in coordination with department heads shall establish appropriate programs to develop the capacity of employees to render more effective service to the City. Such programs may include formal courses, seminars, workshops, demonstrations, directed readings, special assignments and other activities designed to improve employee knowledge, skill and job effectiveness with due consideration for the personal career objectives of employees and the enhancement of equal employment opportunity. Employee development activities shall be conducted during regular working hours to the extent possible.

5.2.1 Conferences and Education

The City encourages the development of job skills by allowing participation in available conferences, training sessions, and applicable business meetings whenever possible and economically feasible. Attendance of City employees at such meetings should be identified prior to establishment of the annual budget.

A. *Approval and Arrangements:* Prior approval shall be required from the Mayor or City Administrator and assigned department head for attendance by the elected body or City employees at available conferences, training sessions, and business meetings. Employees shall make appropriate advanced arrangements for transportation, hotel accommodations, and activity attendance—the City will fund or reimburse an employee for such arrangements as are needed. The least expensive practical mode of transportation shall be authorized. If the event is not held in a hotel and would require an overnight stay, attendee shall utilize the **U.S. General Services Administration (GSA)** to determine the maximum allowable lodging expenditure.
B. *Authorized Expenditures:* The following expenditures will be authorized at the discretion of the Mayor, City Administrator or department head in regards to previously approved attendance at an employee development opportunity. Please note, that no request for reimbursement will be issued for any expenses incurred without a valid receipt approved by the Mayor, City Administrator or assigned

department head.

1) **Registrations:** The City shall pay the registration costs, tuition costs, or fees for an employee to attend required/approved conferences, training sessions and business meetings. All registrations must be made in a timely manner in order to receive any discounts in the fees. Anyone who registers for an employee development opportunity will be required to be in attendance. If, for some reason an employee is not in attendance with no unavoidable reason provided, the City will require reimbursement of all associated fees. Non-attendance with an unavoidable reason provided will be reviewed and approved at the discretion of the Mayor or City Administrator.
2) **Travel to Authorized Function:** When automobile transportation is appropriate to attend an engagement out of the area without an overnight stay, use of a City-owned vehicle is the preferred mode. If a City-owned vehicle is not available, the engagement includes an overnight stay, or if the City Administrator authorizes the use of a personal vehicle, the employee shall be at the established **U.S. General Services Administration (GSA) rate per mile.** Odometer readings shall accompany any mileage reimbursement requests. Employees may also submit a reimbursement request for any parking or storage expenses while on this travel. Employees using City vehicles are individually responsible for all fines or penalties assessed to the employee as a result of speeding tickets or other traffic offenses for which the employee is cited during travel to and from the authorized event.
3) **Per-Diem Meal Reimbursements:** Employees in pre-approved travel status may be eligible for a flat-rate per-diem reimbursement if certain conditions apply:
    - Travel was previously requested and approved by supervisor prior to embark.
    - Breakfast may be reimbursed if the employee enters travel status before 6:30AM or had an overnight stay the night before. A flat rate will be paid based on the location of embark or hotel location of stay.
    - Lunch may be reimbursed if the employee enters travel status before 11:00AM or returns from the previous night's stay at or after 2:00 PM. A flat rate will be paid based on the location of the employee's meal location.
    - Supper may be reimbursed if an employee enters travel status after 5:00 PM or returns from the previous night's stay at or after 7:00 PM. A flat rate will be paid based on the location of the employee's meal location.

    Meals will be reimbursed at a flat, established rate per meal instituted by the **U.S. General Services Administration (GSA)** for the approved employee development or business travel event. This practice shall apply to both in- and out-of-state travel. Attendee shall reference gsa.gov and associated location(s) to determine the expected amount to be reimbursed for qualifying meals. An employee must include or verify the following items for consideration of a meal reimbursement request:

    i. Reimbursement will only be given while the employee was performing services as an employee.
    ii. An employee must include the following information with a reimbursement request:

1. For Breakfast - Date, Time and location of embark or hotel stay.
2. For Lunch – Date, time, and location of embark and meal location (City, State).
3. For Supper – Date, time and location of embark and meal location (City, State).
4. **An employee must submit documentation confirming their reimbursement request, including details for each requested meal, within five (5) business days from return of travel event for consideration of per-diem reimbursement. NO receipt will be required for submittal.** Requests submitted after this time period may be approved at the discretion of the department head and/or City Administrator.

For ease of City accounting, it is requested the employee use a personal form of payment and submit a request for per-diem reimbursement upon return.

4) **Out-Of-State Travel:** Attendance of employee development opportunities within the state of Nebraska is always the preferred option. Should no equivalent opportunity exist locally, a request for approval of out-of-state travel may be considered and approved at the discretion of the Mayor or City Administrator. Such request shall include a copy of any conference brochure, an itemization of anticipated costs, a statement of the purpose of attendance in terms of what the participant hopes to accomplish and how the City will benefit, and a proof that a comparable activity is unavailable in Nebraska or impractical to attend. If air travel is proven to be the more economical option based on time and cost considerations, the employee shall book and will be eligible for reimbursement only for travel in the economy class. Upon completion of the travel, the participant may be requested to prepare a report for the City Administrator assessing the value of the activity and how it may benefit City operations.
5) **Hours of Attendance:** Any hours of attendance or travel time to the employee development event over the regularly scheduled work hours as prescribed for that employee, shall be flexed as time-off during the same pay period whenever feasible. If the department head determines that time-off is not feasible, full-time employees will be allowed to accrue these hours as compensatory time or receive overtime pay. Time utilized for social hours, non-business meals, or personal business are not to be included in hours of attendance.

5.2.2 College Credit Reimbursement Policy

The City shall provide financial assistance on a reimbursement basis to a full-time employee, for pre-approved job-related college credit courses. An employee must submit a written request to the City Administrator at the start of each quarter/semester, which specifically explains how the course directly relates to their position and will enhance their job skills/abilities. To receive financial assistance, the employee must provide City Hall with proof of successful completion of the course along with documentation (billing statements/receipts) of course tuition, books or laboratory fees. The employee will be reimbursed up to fifty percent (50%) of all eligible costs at the determination of the City Administrator.

5.3 Employee Evaluations

The work performance of each regular full-time or regular part-time employee, who has completed their introductory/evaluation period, shall be evaluated on a semi-annual basis, for

periods ending September 30th and March 31st. The primary reason for performance evaluations is to identify employee strengths in order to reinforce good habits and identify and develop plans for improvement in deficient aspects. This review also serves to make employees aware of and to document how their job performance compares to the goals and responsibilities of their position. A supervisor shall informally provide day-to-day feedback and counseling outside of the employee evaluation to ensure that expectations are being met to encourage a successful evaluation rating. The City strives in assisting employees in the development and progression of professional abilities to achieve personal, as well as work-related goals; therefore, any goals identified for the coming evaluation period should be formulated with employee development in consideration.

A formal evaluation, on the prescribed form(s), shall be made by the department head or the employee's immediate supervisor. The evaluation shall become official when reviewed and approved, with any necessary modifications, by the City Administrator. Employees shall be shown copies of their performance evaluations for discussion and for acknowledgment by signature. Employee evaluations shall be kept with the employee file when completed. Employees disagreeing with their evaluations may seek adjustments through use of the appeals procedure, as specified in **Section 7**.

5.3.1 Performance Evaluation Process

In preparation for an upcoming evaluation period, the following steps should be undertaken to ensure fair and effective evaluations:

1. Prior to the start of the next evaluation period, an immediate supervisor or department head should consult with an employee to establish realistic, specific, and measurable goals which will further employee development and enhance departmental operations.
2. Proposed goals shall be reviewed and approved by the department head, signed by the employee, and forwarded to the City Administrator for review prior to the April 1st or October 1st start of the evaluation period.
3. Supervisor shall provide informal day-to-day consultations about an employee's progress versus stated goals or expectations. Supervisor shall note any observed behaviors, significant incidents, accomplishments, negative performance or disciplinary actions within the six-month evaluation period.
4. Near the conclusion of the current evaluation, immediate supervisor or department head shall take into account observed behaviors and performance and consider evaluation ratings. The supervisor shall schedule a private and uninterrupted meeting with the employee after ratings have been completed.
5. The employee shall be provided a copy of the evaluation prior to the evaluation meeting.
6. The evaluation meeting shall include the following elements:
    a. A setting where the employee is able to express themselves freely.
    b. Reinforcement of positive behaviors and discussion of shortcomings.
    c. Identification of any underlying personal or work-related problems the employee is experiencing which may negatively affect performance.
    d. Planning of realistic, specific, and measurable goals for the subsequent evaluation period based on evaluation of current progress.
7. Following the evaluation meeting, the employee, department head, and City Administrator will review and sign the document which will become part of the employee's permanent record.

5.3.2 Effects from Performance Evaluation Rating

As specified in **Section 3.4**, an employee must maintain at least a 'Meets Expectations' average cumulative rating for both semi-annual evaluations to be eligible to move to the subsequent step. Step advancement, and new rate of pay, will be effective each April 1st.

An employee that achieves below a 'Meets Expectations' average cumulative rating for both semi-annual evaluation periods shall not be eligible for step advancement, may be subject to a probationary period of performance review as specified by the City Administrator, or may face disciplinary action up to and including termination of employment.

5.4 Employee Awards Program

At the discretion of the Mayor, the City of Seward may provide one recognition dinner each year for the elected body and employees of all classifications. The maximum cost for such dinner shall be established in the budget process and compliant to any Nebraska statutory limitations. Employees shall be recognized for the following service milestones with presentation of a certificate and a gift of appreciation in the following amounts:

Years of Service	Gift Amount	Years of Service	Gift Amount
10	$ 50.00	15	$ 75.00
20	$100.00	25	$125.00
30	$150.00	35	$175.00
40	$200.00	45	$225.00
50	$250.00		

SECTION 6: EMPLOYEE DISCIPLINE AND SEPARATION FROM EMPLOY

6.1 Corrective and Disciplinary Actions

Employees of the City are expected to act in a mature and professional manner while performing services for the City. It should be noted that an employee working for the City is viewed in a public light; therefore, off-duty conduct should also positively espouse the qualities that brings credit to the City. The following section sets forth general guidelines regarding unacceptable conduct in the workplace. However, your employment with the City does not create a contractual relationship, and as an 'at-will' employer the City may terminate an employee's employment regardless of whether unacceptable conduct was engaged or not. Disciplinary procedures for sworn Police Officers shall be governed by the procedures included in the Civil Service Rules & Regulations in accordance with State Law and adopted by the City Council.

It shall be the responsibility of all supervisors to supervise reasonably and impartially, and when necessary, recommend disciplinary procedures upon the personnel assigned to them. A recommendation for disciplinary action shall be lodged with the Human Resource Director, who will then review with the City Administrator to determine the appropriate response to the infraction(s) raised. Depending on the severity of the infraction(s), an employee may be subject to discipline up to and including termination. The following forms of disciplinary action may be considered at the discretion of the City Administrator in coordination with the Human Resources Director: oral reprimand; written reprimand; suspension, with or without pay, or demotion to a lower classification; formal notice of unsatisfactory job performance requiring a six-month evaluation period of fitness to continue service; or immediate dismissal from City service. Disciplinary action may affect an employee's request for transfer, promotion within City service, or achieving subsequent steps in the City's pay plan structure. Failure of an employee to report an observed disciplinary matter in an expedient manner may result in the employee receiving discipline up to and including termination. For appeals to disciplinary action, please consult **Section 7** which describes the process.

The following is a list (not all-inclusive) providing examples of unacceptable conduct:

1) Failure to observe safety precautions or operating procedures that may or do result in injury, property damage or death. Failure to report to assigned department head anticipated treatment or surgery for a work-related injury.

2) Failure to report to work at the appointed time or place; or absence without leave; or taking unauthorized or excessive time for lunch or rest break; or unauthorized early departure from duties with or without proper relief.

3) Unauthorized solicitation, or distribution or display of, unauthorized literature during regular work time.

4) Conducting excessive personal business on City time, including excessive use of cell phone.

5) Discourteous or unprofessional behavior to a member of the public or another City employee.

6) Abuse, misuse, neglect, sabotage, or waste of City property.

7) Horseplay, loafing, or sleeping while on duty.

8) Slander, defamation, backbiting or subversion of other employees, supervisors, managers, or elected officials.

9) Use or attempted use of intimidation or coercion to obtain an advantageous result.

10) Violation of City policies and procedures, as specified in writing or verbally

understood.

11) Unauthorized obtaining, use or communicating release of confidential, sensitive, or privileged information.

12) Intentional unavailability for, refusal, or inability to maintain physical/mental readiness to work during a call-back event or in the case of a community disaster.

13) Abuse of sick leave or other paid leave.

14) Conduct unbecoming of a City employee, tending to be prejudicial to the reputation on the City government, or otherwise contravening the public interest.

15) Failure by an employee to assume responsibility or exercise diligence, intelligence and interest in the pursuit of assigned duties either in quality or quantity, or whose performance is below acceptable standards as established in the performance evaluation system.

16) Insubordination, including the willful refusal to comply with lawful order of higher authority. The term 'lawful order' shall mean a directive authorized by law, rule, or regulation.

17) When required by job description and duties to possess a driver's license or Commercial Driver's License, suspension, revocation of or inability to possess a driver's license, including the inability for the City to obtain automobile insurance of the employee due to infractions.

18) When required by job description to obtain or retain required licenses, certifications, or classifications, the inability or failure to do so in the timeline provided in the approved job description.

19) Theft of public or private property, or property belonging to the City including misappropriation of any City property.

20) Unlawful harassment.

21) Consumption, being under the influence of, or possession of non-prescribed drugs or alcohol while on duty. Failure to notify a supervisor of prescription drugs that may impair an employee while on duty.

22) Unauthorized or improper use of official authority, including making false statements in connection with any official duties.

23) Acceptance of any bribe for performance or non-performance of duties.

24) Conviction of a Felony or a Class I Misdemeanor.

25) Gambling during regular work hours or on City property.

26) Fraud, falsification, or deceit in the conduct of City business or of any City document or record.

27) Unauthorized possession or use of firearms or hazardous materials during regular work hours or on City property.

28) Work disruption or stoppage, engaging in a strike, work stoppage or slow down, or other forms of job action withholding timely delivery of City services.

29) Acts or threats of physical violence directed towards City officials or employees, or any third-party during work hours, duties, or functions. Fighting while on duty.

30) A supervisor who knowingly issues an order requiring a subordinate to commit an illegal act and an employee who knowingly obeys an order requiring committal of an illegal act.

31) Failure to report an observation of the above notated items of unacceptable conduct to department head and/or Human Resource Director.

6.1.1 Investigative Leave

When an employee is under investigation for a crime or official misconduct or is awaiting hearing or trial in a criminal matter, they may be placed on investigative leave—with or without pay—for the duration of the investigation or proceedings if necessary to protect the public interest. Such suspension action shall require the approval of the Mayor or City Administrator, or appropriate authority and any return to duty shall be under such terms and conditions as may be specified by the Mayor or City Administrator, or appropriate authority.

6.2 Separation from Employment

Employment for non-appointed and non-contracted positions with the City is on an "at will" basis. Employment "at will" means that either the employer or the employee may terminate the employment relationship at any time, with or without cause, and with or without notice. Contracted employees may be removed as per the terms outlined in the employment agreement. Per Nebraska statutory requirements, removal of appointed officers **(found in City Code Chapter 85)** of the City may be recommended by the Mayor with approval of a majority of the City Council present at a regular meeting. Permanent employment or employment for a specific term is neither guaranteed nor promised to any employee.

Employees separating their employment with the City, whether through layoff, dismissal, resignation, or retirement, shall be responsible for returning any City property that they have in their possession. Such property as identification cards, badges, keys, etc., must be returned to the department head or Human Resources Director on the last day of employment. Additionally, an exit interview shall be arranged on the employee's last day of active service. Employees who leave service in good standing may qualify for re-employment as provided in **Section 1.4**.

6.2.1 Reduction in Force (Layoff)

As an "at-will" employer, a non-appointed or non-contracted employee may be laid off because of a reduction in required personnel, reorganization of a department or City Function, a decrease in workload, or a lack of funds. Whenever possible, employees who are to be laid off in one department shall be integrated into another department by transfer. Determinations of department transfer will include the following determinations: length of City service; performance record; acquired certificates and licenses; and knowledge, skills, education, and abilities.

For those employees not covered by State Civil Service laws, the following procedure will be utilized when a layoff is necessary:

1) The City Administrator will determine how many employees are to be reduced from the payroll.
2) The City Administrator will determine by skill levels, work record and length of service, who are the employees to be reduced.
3) The City Administrator will determine those employees who are in critical jobs which are exempted from this procedure. A critical job is defined as one which requires special skills, education, training, or specialized knowledge.
4) The City Administrator will review any lay-off determination with the Mayor and City Council prior to issuing formal notice to affected employees.

The City will provide at least two (2) weeks' written notice of a layoff prior to the effective date unless an emergency exists. The written notice shall include the reasons for the action as well as last date of work and benefit coverage information. Within two years following the effective date of the reduction in force, any person terminated solely because of the reduction in force shall be afforded an opportunity for reinstatement to the same position from which the termination occurred or a position below the former position, provided that the person is qualified to perform the duties of the position and such reinstatement would be in the best interest of the City.

6.2.2 Dismissal from Employment

Dismissal of a non-appointed or non-contracted employee may occur if an infraction, or series of infractions, are so grave in nature that continued employment would affect the operational effectiveness of the department. In these instances, the department head shall confer with the City Administrator describing the infraction(s) and the reason(s) for recommendation of dismissal. The recommendation shall be reviewed by the City Administrator after consultation with the Human Resource Director. If it is determined that dismissal should occur, written notice of such determination shall be given to the affected employee and the Human Resource Department for inclusion in the employee's personnel file. The notice shall clarify the infraction(s) committed and the last date of employment as well as the deadline to appeal the action via writing. Please refer to **Section 6.2** for a description of the dismissal of appointed employees.

6.2.2a Failure of Six-Month Introductory/Evaluation Period

At any time during the six-month introductory or evaluation period, an employee may be dismissed from the City service or may be reassigned by lateral transfer or demotion if their conduct, quality of work and/or fitness are insufficient to continue in the position. See **Section 1.5.1** for further information**.**

6.2.3 Resignation from Employment

All appointed officials as defined by City Code and without a contract, who desire to resign in good standing, shall provide a written resignation to the City Administrator a minimum of forty-five (45) days prior to the effective date of their resignation. Non-appointed employees, without a contract, who desire to resign their position in good standing, shall provide a written resignation to the Human Resources Director at least two (2) weeks prior to the effective date of their resignation. Earlier notification is preferred if possible. Accrued non-sick leave will not be allowed during the final two (2) week time period, except by agreed upon, written conditions between the employee and the Mayor or City Administrator. Compensation for any accrued, eligible leave balances, in accordance with **Section 4.2.3** and **Section 4.3.4,** will be issued to the employee with their final paycheck.

6.2.4 Retirement from Employment

An employee is eligible for retirement when they've reached the age of 'full retirement' or 'early retirement' as defined by the Social Security Administration. An employee may continue their employment beyond the full retirement age if they desire and remain capable of performing the mental and physical responsibilities as defined in their associated job description. In these instances, and at the discretion of the City Administrator, employee may be required to undergo appropriate examinations to determine whether they should continue in employ if signs are observed of them not being able to perform the duties required by the position.

An employee who qualifies for retirement will be entitled to their benefits as outlined in **Section 4.6.5** as well as payout for any accrued, eligible leaves in accordance with **Section 4.2.3** and **Section 4.3.4.**

SECTION 7: EMPLOYEE APPEALS

It is the preferred option for employees to informally take any job-related complaints, evaluation appeals, or questions about disciplinary action to their immediate supervisor for resolution. The City does not tolerate any form of retaliation against employees availing themselves of this procedure. The procedure should not be construed however, as preventing, limiting, or delaying the City from taking disciplinary action against any individual, up to and including termination. **Note:** For Police Department employees subject to the Civil Service Act, the appeals procedure for any topics established in the Civil Service Commission Rules & Regulations governs. The following types of appeals fall under this category:

- *Disciplinary*: The City strives to provide fair and equitable treatment to all employees and to provide a welcoming atmosphere. If an employee feels disciplinary action was unjustly applied or if an employee is experiencing an unwelcome atmosphere, an appeal or complaint can be made.
- *Performance Evaluation*: By their very nature, performance appraisals are subjective, even though they include objective performance standards. Immediate supervisors and department heads are in the best position to evaluate an employee's work performance and work behavior. For this reason, the Human Resource Director will not attempt to substitute their judgment for the supervisors unless an employee can demonstrate that the evaluation was arbitrary, capricious, illegally discriminatory, or just plain wrong based on verifiable data. If an employee feels they have been incorrectly evaluated, an appeal can be made.
- *Handbook Interpretation*: The basis of the handbook is to provide a transparent, equitable, and consistent opportunity for all City employees by providing good working conditions, opportunity for advancement, consideration for employee welfare and a basis for understanding the conditions of City employment. If an employee feels an item within the handbook has been handled incorrectly by a department head or City Administration, an appeal can be made.

7.1 Procedure

An employee wishing to file an appeal or complaint, should follow the formalized procedure as identified below:

Step One: If an employee wishes to file an appeal or a complaint, it shall be presented in writing to their department head within five (5) business days from the time of occurrence. The appeal/complaint shall clearly state the basis and the relief requested. The department head will review the complaint with the City Administrator and Human Resource Director. Upon completion of review, the department head shall respond to the employee in writing within five (5) business days after receipt. Meetings may be held within this timeframe with the employee, and any other witnesses, to discuss the complaint in further detail or to complete an investigation.

Step Two: If an employee still feels the answer is not satisfactory, they may appeal the decision in writing to the Mayor within five (5) business days after receiving the written response from the department head. The Mayor will investigate the complaint within ten (10) business days. The investigative process may include any of the following: a review of the written summary of the employee's statement, a review of the department head and City Administrator's findings, discussions with all witnesses or individuals concerned, and a further investigation by the City's Labor Attorney if necessary. Meetings may be held within this timeframe with the employee, and any other witnesses, to discuss the complaint. After the investigation is completed, the Mayor or City Attorney will advise the employee in writing of the results and decision based on that investigation. The decision will be final and binding.

ATTACHMENT A: SELECTED DEFINITIONS

ANNIVERSARY DATE: The calendar date upon which employment started with the City of Seward by a specific employee.

COMPENSATORY TIME-OFF: Time off with pay in lieu of overtime pay for irregular or occasional overtime work, for either full-time exempt or non-exempt employees. Overtime hours should be authorized in advance by the department head.

CONTINUOUS EMPLOYMENT: The time from original employment to the current date of employment without separation.

BUSINESS DAY: Any day in which normal business operations are conducted. The normal schedule of business operations is 7A – 4P on M-F for non-Police and non-Library personnel.

CALENDAR DAY: Each day shown on the calendar beginning at 12:00 midnight, inclusive of Saturdays, Sundays, and Holidays.

DEPARTMENT: A major functional unit of the City of Seward governmental structure.

DEPARTMENT HEAD: A person directly responsible for the administration of a City department.

DISMISSAL: The end of an employee's service to the City by choice of the employer (City).

EMPLOYEE: An employee may be defined as:

1) Regular, full-time. This employee works 2080 hours per year and is eligible for full benefits.
2) Regular, part-time. This employee works a minimum of 1,040 hours over a 12-month period and is therefore eligible for fringe benefits on a prorate basis.
3) Part-time. This employee works less than 1,040 hours over a 12-month period and is therefore not eligible for fringe benefits.
4) Seasonal. This employee may work up to 40 hours weekly for a specified period of time.

EXEMPT EMPLOYEES: Employees paid on a salaried basis and whose primary duties and responsibilities meet the Fair Labor Standards Act criteria for executive, administrative or professional exemption from eligibility for overtime compensation.

NONEXEMPT EMPLOYEES: Employees paid on an hourly basis and whose primary duties and responsibilities meet the Fair Labor Standards Act criteria for mandatory eligibility for overtime compensation and minimum wages.

EMPLOYEE EVALUATION SYSTEM: A systematic way to examine how well an employee is performing their job against pre-determined standards and goals agreed by the employee and department head. Employees shall be evaluated after their initial six months on the job to determine fitness; and thereafter, semiannually (October 1st and April 1st).

EVALUATION PERIOD: A six (6) month time period—either April 1-September 30 or October 1–March 31—where an employee shall be required to demonstrate their continued fitness for the position through their actual performance of their expected duties and responsibilities.

FITNESS FOR WORK: When an employee is in a state (physically and psychologically) to perform the tasks assigned to them competently and in a manner which does not compromise the safety of themselves or others.

GOOD STANDING: A resignation giving the City at least two (2) weeks written notice in advance of the last date of service for non-appointed positions, or at least 45 days written notice for appointed positions.

GRIEVANCE: Any concern, problem, or complaint that an employee has relating to employment conditions or relationships. An employee is encouraged to follow the complaint procedure.

HOLIDAY: The twenty-four (24) hour period starting at midnight and ending at midnight of the day observed.

INTRODUCTORY PERIOD: An employee's first six months on the job which will determine their fitness to meet expectations of assigned duties and responsibilities. If they are determined to be 'fit' they will continue with City employment.

LAYOFF: The temporary or permanent separation of employment by the employer for reasons unrelated to the employee's performance.

LEAVE: An authorized absence from regularly scheduled work hours which has been approved by proper authority.

- EARNED LEAVE: The leave earned by an employee by continuous employment with the City. Types and accrual amounts shall be determined by the Council and are specified in the handbook.

OVERTIME: Authorized time worked by an employee in excess of their total normal working hours per week, pay period, or for hours worked when an employee is called in to respond to an emergency.

REPRIMAND: A form of disciplinary action—either verbal or written—which informs the employee that their behavior or work performance is not meeting expectations. Direction should be provided to instruct the employee in how to correct and avoid repeating the mistake, infraction, deficiency, or problem.

SEPARATION: The end of an employee's service to the City, either by choice of the employee or employer by layoff, resignation, retirement, or dismissal.

SUSPENSION: A formal disciplinary action relieving an employee from their duties without pay for a specified period of time.

- ADMINISTRATIVE SUSPENSION: When an employee is relieved of their duties for a specific period of time without any loss of pay for internal investigatory purposes.

TERMINATION: See "Dismissal" above.

TOBACCO PRODUCT: Any product made or derived from tobacco, or containing nicotine from any source, that is intended for human consumption.

WORK PERIOD: For all employees, other than law enforcement officers, the work period shall begin at the end of the shift on Friday and conclude at the end of the shift on the Friday following a seven-calendar day period. For law enforcement officers, the work period shall begin at the end of the shift on Friday and conclude at the end of the shift on the Friday following a fourteen-day period. Non-exempt employees may only work during their scheduled work shift, and all off-shift work is strictly prohibited without pre-authorization by the Department Head or appropriate authority. Working unauthorized overtime is grounds for disciplinary action, up to and including termination of employment.

WORKERS' COMPENSATION: Provision of medical expenses, lost wages, and rehabilitation costs to employees who are injured or become ill 'in the course and scope' of their job, as determined by the applicable state laws.

WORKING TIME: All hours spent performing the duties of an assigned job; travel between job sites during or after the employee's regular hours of work (where no overnight expenses are involved); rest periods allowed during the employee's regular hours of work.

ATTACHMENT B

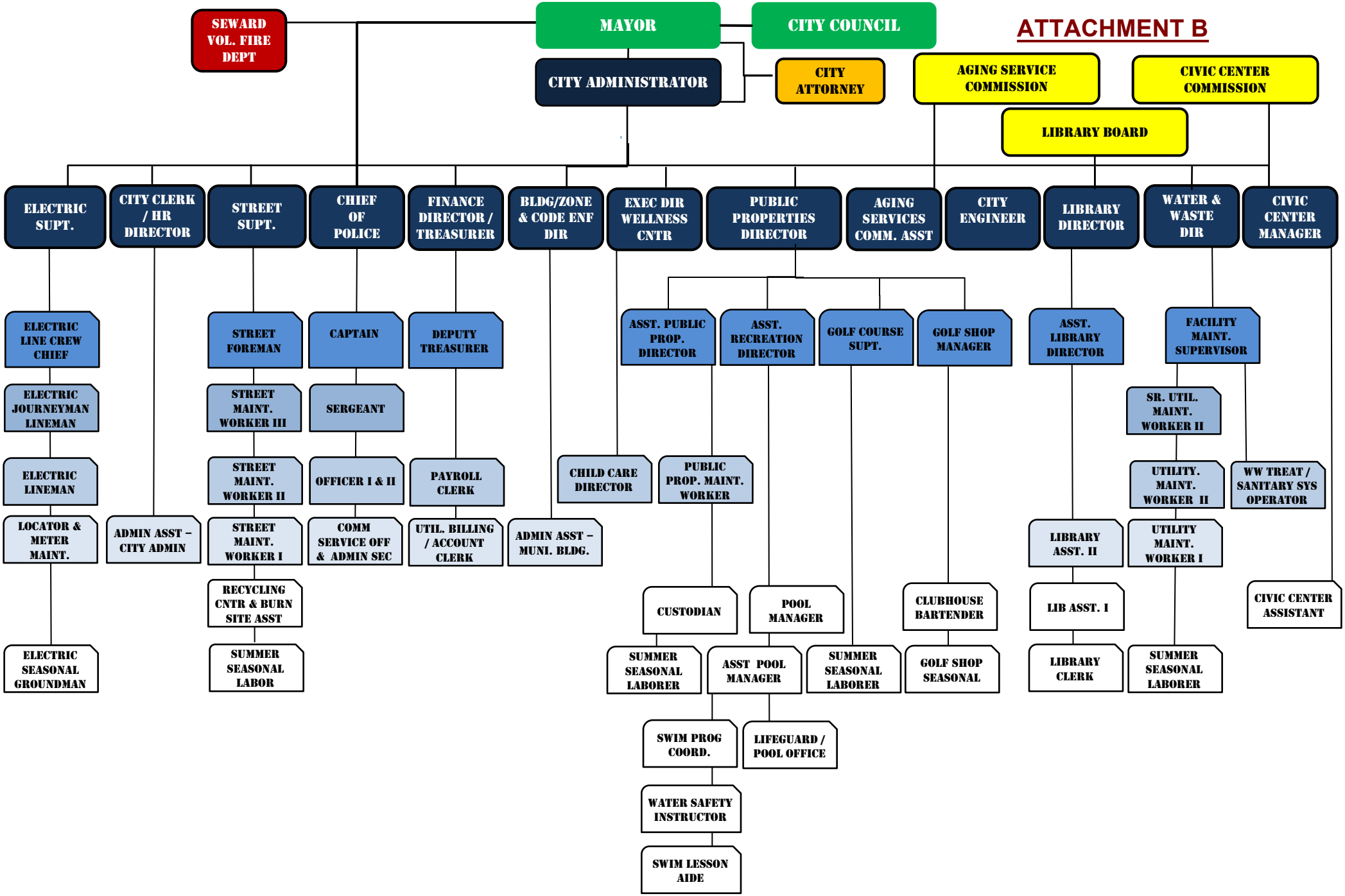

NOTE: The chain of command for each department may vary slightly from the graphic above. This is merely an attempt to identify each position established in the City of Seward salary schedule.

Approved
October 1, 2024

ATTACHMENT C: UPDATES TO HANDBOOK TRACKING

All changes to the introduction through Section 7 will be approved by Council action. Attachments A&B will be updated as Administraiton sees fit. Below, please find the tracked changes through Council action:

Date of Change	Section(s) Included	Summary of change
12/3/24	3.8.2; 4.4.1b	Better Define on-call compensation for SCADA, inclement weather; Specify if employee can’t report back to office they will only be compensated only for hours worked

5. Consideration of a Request from City Administration for the Approval of Sale and Consumption of Alcoholic Beverages at the Electric Department Shop (1345 River Street) for the Employee Annual Awards Banquet, Held on April 17, 2026 - City Administrator Butcher

CITY ADMINISTRATOR'S REPORT

CITY ADMINISTRATORS REPORT – 3/17/2026

The departments are working on the following projects to name a few:

- Monitoring a number of street projects including: East Seward (final items), design on East Hillcrest, design of 5th and Bradford/Roberts Drainage, Design of Lindell and Jackson Reconstruction, construction of Worthmann Blvd extension.
- Water Tower project underway. Working on cellular installations, electric connections, fiber connections and demolition planning for old tower.
- Check in meeting with Building and Zoning Staff.
- Met weekly with Jonathan Jank (SCCDP) to update on the status of economic development items.
- Held weekly Department Head Meetings.
- Responded to inquiries from project team related to site visit for potential economic development project.
- DARI Weekly onsite trailer meeting.
- Golf Course Team meeting to discuss upcoming season, opening dates, procedures, seasonal staff hiring, course improvements, leagues, tournament schedule, improvements for pass holders.
- Worked on extensive employee handbook changes with City Clerk/HR Director, reviewed changes proposed by staff.
- Drafted LB 840 documents for Kach 133 LLC application at 133 N. 6th Street.
- Monitored a number of items before the Nebraska Legislature.
- Reviewed PlacerAI system presentation that SCCDP is looking into for economic data mapping.
- Reviewed January financials with Finance Director.
- Attended March Planning Commission meeting to discuss first go of proposed Data Center zoning regulations.
- Attended revitalize and thrive committee meeting to discuss proposed outdoor development on the northwest corner of the Civic Center block. Met with attendees and provided feedback.
- Attended the General Employee and Police Pension Annual Meetings with City Clerk and Committee members along with Ameritas representative.
- Reviewed items related to the $100,000 Grant Award for the Seward Creative District from the Nebraska Arts Council, funds will be directed to creating an Executive Director position, artist in residency program, and expanding the arts within the City's designated Creative District.
- Out of the Office 3/6 for vacation day. Worked half day 3/9 due to elementary school being out of session.

Police Department

- Concordia Spring Break this week
- Zuercher Stakeholders Meeting Tuesday
- Command Staff meeting Wednesday
- Police Pension Committee

City Clerk/Human Resources/City Hall

- Employee Handbook: Final Drafts by End of the Week
- DR-4896 (August): Continue work in FEMA Grants Portal
- Employee Pension Committees: Meetings on 3/13
- 2026 Dowding Pool: Collecting re-apps, advertising; setting orientation date with Jamie
- Surplus Items List: Work with Purplewave to Set Auction Date
- LB304 List (City memberships): Complete Updated Draft
- Current Open Positions: Utility Maintenance Worker (Interviews on 3/10), Library Director (apps through 3/31/26), Golf Shop Staff (working with Zach to gather).
- Current Public Record Requests: One Regarding Asphalt Bids.

Water/Wastewater Department

- Van Kirk to begin bore under RR north of Walker Rd for Worthman Phase III loop
- Continue to gather data to submit to JEO for Water Study
- Interviews for open position on Tuesday
- Pour back section of sidewalk at 5th and Hillcrest
- Work on SW 2 check valve
- Get mowing equipment serviced before mowing season

Parks and Rec/Cemetery/Golf/Pool

- Golf Course opened on Sunday
- Disc Golf Tournament on Sunday (90 players)
- Pouring concrete Tuesday and Thursday
- Work on hole 4 at the Golf Course when the rock comes in

Civic Center

- Walkthrough last Friday
- Commission meeting on Monday
- Architects and surveyors here last week measuring and taking pictures for ramp renovation

Electric Department

- Installing conduits, setting poles & junctions at the Dari Project
- Switch out 2400 Ash St Sub NPPD planned to fix oil leak on regulator
- Install new head at the Downtown Car Charger
- Work with Olsson on recloser settings for Breaker 74

Street Department

- Work on old fall projects
- Start moving equipment around for spring
- Drag alleys
- Push up and burn pile
- Take down tree on South 2nd Street by lift station

Library

- Reader's Choice Book Group
- Brush Hour Paint Party
- Staff meeting
- Pension Meeting
- Reading Dragons Party

Building Inspection/Planning Department

- Planning Commission – ULDO amendment to update for Data Centers
- Focus Apts. - Drainage review of south alley way
- Property maintenance – Follow up letters to 437 S 6th St and 3294 S Hwy 15
- Locust Apts. – Meeting with neighbor, concerns about the existing retaining wall and the apts. have refused the bid from the contractor
- SVP Apts. – Egress window complaint follow-up
- 107 South St – Structure was demoed, foundation is fenced. Waiting for an engineer report for existing foundation usability

Engineering

- 500k Water Tower – SRF loan, site work, review disinfection plan, T-Mobile and AT&T equipment relocation construction documents, Last Mile demo of communication eqpt
- Rail Campus Watermain Extension Phase III – Site meeting (Mon 10 AM), Change Order No. 1 (City Council Mar 3), prep this week, BNSF flaggers start Mar 9.
- WWTP Upgrade – updated metering manhole quote from Armorock, review bid documents, City Council approve to advertise (March 17)
- Worthman Blvd Extension – restore existing streetlights, intersection pours.
- Water System Study – initial information gathering (biweekly meeting Wed 1:30)
- East Hillcrest Drive – plat map options, easement docs
- 2nd Street Lift Station – data (from Water System Study), develop into CIP, design, project documents, and bid
- South 2nd Street & Izaak Walton Interceptor Sewer – data (from Water System Study) to augment expanded South Side service area

Finance Department

- Claims
- Utility Service Orders
- Utility Bank Bills
- Balance February Financials
- Corrections to State Tax Form 10

Seward Wellness Center

- Session 2 of swimming lessons has ended
- Taking registrations for Private Adult and Parent/Infant swimming lessons

FUTURE REQUESTS FOR COUNCIL AGENDA ITEMS OR ADMINISTRATIVE ACTION
ANNOUNCEMENT OF UPCOMING EVENTS
MOTION TO ADJOURN

I, Derek Bargmann, the duly appointed qualified and acting City Clerk of the City of Seward, Nebraska, hereby certify that the foregoing Notice of Meeting and Agenda for such meeting has been posted in the following places: Seward City Hall, Seward Memorial Library, and CityofSewardNE.gov

IN WITNESS WHEREOF, I have hereunto set my hand officially and affixed the seal of the City.

_____ _____
Derek Bargmann, City Clerk Date